Rosemount 3051 Pressure Transmitter

HART® AND FOUNDATION™ FIELDBUS PROTOCOLS

- *Best-in-Class performance, 0.04% High Accuracy option*
- *Industry first five-year stability under actual process conditions*
- *Unmatched Dynamic Performance*
- *Coplanar™ platform enables integrated pressure, flow, and level solutions*
- *Advanced PlantWeb® Functionality*

Contents

Setting the Standard for Pressure Measurement

Industry's best total performance, a flexible *Coplanar* platform, and guaranteed 5- year stability, has made the Rosemount 3051 the standard in pressure measurement.

Industry's best total performance of ±0.15%
Total performance is the true measure of "real-world" transmitter performance. Using superior sensor technology and engineered for optimal performance, the 3051 delivers unprecedented ±0.04% reference accuracy, resulting in total operating performance of ±0.15%. Superior total performance equates to reduced variability and improved plant safety.

Five year installed stability of ±0.125%
Transmitter stability is a critical measure of transmitter performance over time. Through aggressive simulation testing beyond standard IEC 770 testing, the 3051 has proven its ability to maintain performance over a five year period under the most demanding process conditions. Superior transmitter stability reduces calibration frequency to save operation and maintenance costs.

Unmatched dynamic performance
In dynamic applications, speed of measurement is as important as repeatability. The 3051 responds up to eight times faster than the typical pressure transmitter to detect and control variations quickly and efficiently. Superior dynamic response yields more accurate measurements to reduce variability and increase profitability.

***Coplanar* platform enables complete point solutions**
The versatile *Coplanar* platform design enables the best process connection for pressure, flow and level applications. Right out of the box, the solution arrives factory calibrated, pressure-tested, and ready to install. Only the 3051 has a flexible design to reduce engineering and inventory costs.

Advanced *PlantWeb* Functionality
The 3051 powers the PlantWeb architecture by delivering the best sensor and transmitter, best installation practices, and best in class field intelligence. One component is the enhanced diagnostic capabilities in *FOUNDATION* fieldbus that provide an increase in process visibility, enabling proactive maintenance and improving process availability.

Rosemount Pressure Solutions

Rosemount 3051S Series of Instrumentation
Scalable pressure, flow and level measurement solutions improve installation and maintenance practices.

Rosemount 3095MV Mass Flow Transmitter
Accurately measures differential pressure, static pressure and process temperature to dynamically calculate fully compensated mass flow.

Rosemount 305 and 306 Integral Manifolds
Factory-assembled, calibrated and seal-tested manifolds reduce on-site installation costs.

Rosemount 1199 Diaphragm Seals
Provides reliable, remote measurements of process pressure and protects the transmitter from hot, corrosive, or viscous fluids.

Orifice Plate Primary Element Systems: Rosemount 1495 and 1595 Orifice Plates, 1496 Flange Unions and 1497 Meter Sections
A comprehensive offering of orifice plates, flange unions and meter sections that is easy to specify and order. The 1595 Conditioning Orifice provides superior performance in tight fit applications.

***Annubar*® Flowmeter Series: Rosemount 3051SFA, 3095MFA, and 485**
The state-of-the-art, fifth generation Rosemount 485 *Annubar* combined with the 3051S or 3095MV MultiVariable transmitter creates an accurate, repeatable and dependable insertion-type flowmeter.

Compact Orifice Flowmeter Series: Rosemount 3051SFC, 3095MFC, and 405
Compact Orifice Flowmeters can be installed between existing flanges, up to a Class 600 (PN100) rating. In tight fit applications, a conditioning orifice plate version is available, requiring only two diameters of straight run upstream.

***ProPlate*® Flowmeter Series: Rosemount *ProPlate*, Mass *ProPlate*, and 1195**
These integral orifice flowmeters eliminate the inaccuracies that become more pronounced in small orifice line installations. The completely assembled, ready to install flowmeters reduce cost and simplify installation.

Product Offering

Rosemount 3051C Differential, Gage, and Absolute

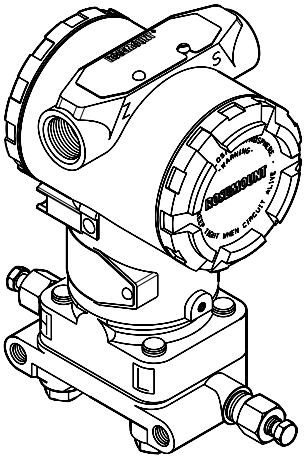

See ordering information on page 25.

- Performance up to 0.04% accuracy
- Five year installed stability of 0.125%
- *Coplanar* platform enables integrated manifold, primary element and diaphragm seal solutions
- Calibrated spans/ranges from 0.1 inH_2O to 4000 psi (0,25 mbar to 276 bar)
- 316L SST, *Hastelloy*® C276, *Monel*®, Tantalum, Gold-plated *Monel*, or Gold-plated 316L SST process isolators

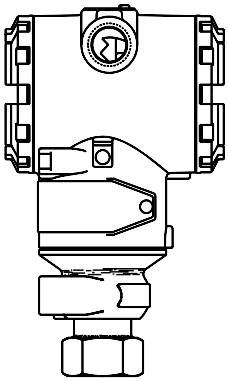

Rosemount 3051T Gage and Absolute

See ordering information on page 29.

- Performance up to 0.04% accuracy
- Five year installed stability of 0.125%
- Calibrated spans from 0.3 to 10000 psi (10,3 mbar to 689 bar)
- Multiple process connections available
- 316L SST and *Hastelloy* C276 process isolators

Rosemount 3051L Liquid Level

See ordering information on page 31.

- Performance up to 0.075% accuracy
- Welded fill fluid system provides best-in-class system reliability
- Flush and extended diaphragms
- Multiple fill fluids and wetted materials available

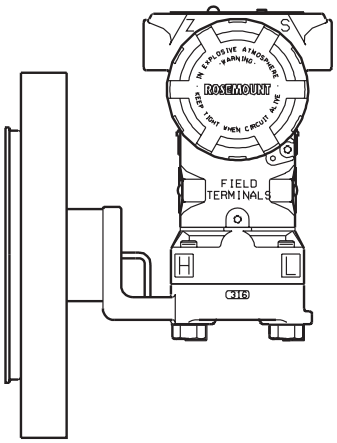

Specifications

PERFORMANCE SPECIFICATIONS

Total Performance is based on combined errors of reference accuracy, ambient temperature effect, and static pressure effect.
This product data sheet covers both HART and fieldbus protocols unless specified.

Conformance To Specification (±3σ (Sigma))

Technology leadership, advanced manufacturing techniques and statistical process control ensure specification conformance to at least ±3σ.

Reference Accuracy(1)

Models	Standard	High Accuracy Option
3051CD, 3051CG		
Range 0 (CD)	±0.10% of span For spans less than 2:1, accuracy = ±0.05% of URL	
Range 1	±0.10% of span For spans less than 15:1, accuracy = $\pm\left[0.025 + 0.005\left(\frac{URL}{Span}\right)\right]$% of Span	
Ranges 2-5	±0.065% of span For spans less than 10:1, accuracy = $\pm\left[0.015 + 0.005\left(\frac{URL}{Span}\right)\right]$% of Span	Ranges 2-4 High Accuracy Option, P8 ±0.04% of span For spans less than 5:1, accuracy = $\pm\left[0.015 + 0.005\left(\frac{URL}{Span}\right)\right]$% of Span
3051T		
Ranges 1-4	±0.065% of span For spans less than 10:1, accuracy = $\pm\left[0.0075\left(\frac{URL}{Span}\right)\right]$% of Span	Ranges 2-4 High Accuracy Option, P8 ±0.04% of span For spans less than 5:1, accuracy = $\pm\left[0.0075\left(\frac{URL}{Span}\right)\right]$% of Span
Range 5	±0.075% of span For spans less than 10:1, accuracy = $\pm\left[0.0075\left(\frac{URL}{Span}\right)\right]$% of Span	
3051CA		
Ranges 1-4	±0.065% of span For spans less than 10:1, accuracy = $\pm\left[0.0075\left(\frac{URL}{Span}\right)\right]$% of Span	Ranges 2-4 High Accuracy Option, P8 ±0.04% of span For spans less than 5:1, accuracy = $\pm\left[0.0075\left(\frac{URL}{Span}\right)\right]$% of Span
3051H/3051L		
All Ranges	±0.075% of span For spans less than 10:1, accuracy = $\pm\left[0.025 + 0.005\left(\frac{URL}{Span}\right)\right]$% of Span	

(1) For FOUNDATION fieldbus transmitters, use calibrated range in place of span. For zero based spans, reference conditions, silicone oil fill, SST materials, Coplanar flange (3051C) or 1/2 in. - 18 NPT (3051T) process connections, digital trim values set to equal range points.

Total Performance

For ±50 °F (28 °C) temperature changes, up to 1000 psi (6,9 MPa) line pressure (CD only), from 1:1 to 5:1 rangedown.

Models		Total Performance
3051C		
	Ranges 2-5	±0.15% of span
3051T		
	Ranges 1-4	±0.15% of span

Long Term Stability

Models		Long Term Stability
3051C		
	Ranges 2-5	±0.125% of URL for 5 years ±50 °F (28 °C) temperature changes, and up to 1000 psi (6,9 MPa) line pressure.
3051CD Low/Draft Range		
	Ranges 0-1	±0.2% of URL for 1 year
3051T		
	Ranges 1-4	±0.125% of URL for 5 years ±50 °F (28 °C) temperature changes, and up to 1000 psi (6,9 MPa) line pressure.
Rosemount 3051H		
	Ranges 2-3	±0.1% of URL for 1 year
	Ranges 4-5	±0.2% of URL for 1 year

Dynamic Performance

	4 - 20 mA (*HART* protocol)(1)	Fieldbus protocol(3)
Total Response Time (T_d + T_c)(2):		
3051C, Ranges 2-5:	100 ms	152 ms
Range 1:	255 ms	307 ms
Range 0:	700 ms	752 ms
3051T:	100 ms	152 ms
3051H/L:	Consult factory	Consult factory
Dead Time (Td)	45 ms (nominal)	97 ms
Update Rate	22 times per second	22 times per second

(1) Dead time and update rate apply to all models and ranges; analog output only
(2) Nominal total response time at 75 °F (24 °C) reference conditions.
(3) Transmitter fieldbus output only, segment macro-cycle not included.

Typical HART Transmitter Response Time

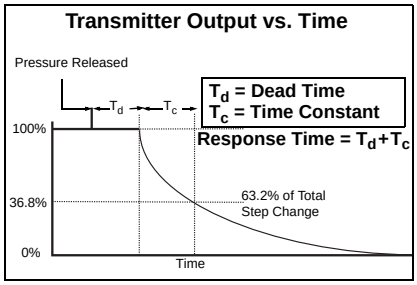

3051-3051_17A

Line Pressure Effect per 1000 psi (6,9 MPa)

For line pressures above 2000 psi (13,7 MPa), see user manual (Rosemount publication number 00809-0100-4001).

Models		Line Pressure Effect
3051CD		Zero Error(1)
	Range 0	±0.125% of URL/100 psi (6,89 bar)
	Range 1	±0.25% of URL/1000 psi (68,9 bar)
	Ranges 2-3	±0.05% of URL/1000 psi (68,9 bar) for line pressures from 0 to 2000 psi (0 to 13,7 MPa)
		Span Error
	Range 0	±0.15% of reading/100 psi (6,89 bar)
	Range 1	±0.4% of reading/1000 psi (68,9 bar)
	Ranges 2-3	±0.1% of reading/1000 psi (68,9 bar)
3051HD		Zero Error(1)
	All Ranges	±0.1% of URL/1000 psi (68,9 bar) for line pressures from 0 to 2000 psi (0 to 13,7 MPa)
		Span Error
	All Ranges	±0.1% of reading/1000 psi (68,9 bar)

(1) Can be calibrated out at line pressure.

Ambient Temperature Effect per 50°F (28°C)

Models		Ambient Temperature Effect
3051CD/CG		
	Range 0	±(0.25% URL + 0.05% span)
	Range 1	±(0.1% URL + 0.25% span)
	Ranges 2-5	±(0.0125% URL + 0.0625% span) from 1:1 to 5:1 ±(0.025% URL + 0.125% span) from 5:1 to 100:1
3051T		
	Range 1	±(0.025% URL + 0.125% span) from 1:1 to 10:1 ±(0.05% URL + 0.125% span) from 10:1 to 100:1
	Range 2-4	±(0.025% URL + 0.125% span) from 1:1 to 30:1 ±(0.035% URL + 0.125% span) from 30:1 to 100:1
	Range 5	±(0.1% URL + 0.15% span)
3051CA		
	All Ranges	±(0.025% URL + 0.125% span) from 1:1 to 30:1 ±(0.035% URL + 0.125% span) from 30:1 to 100:1
3051H		
	All Ranges	±(0.025% URL + 0.125% span + 0.35 inH_2O) from 1:1 to 30:1 ±(0.035% URL + 0.125% span + 0.35 inH_2O) from 1:1 to 30:1
3051L		See Rosemount Inc. Instrument Toolkit™ software.

Mounting Position Effects

Models	Mounting Position Effects
3051C	Zero shifts up to ±1.25 inH_2O (3,11 mbar), which can be calibrated out. No span effect.
3051H	Zero shifts up to ±5 inH_2O (12,43 mbar), which can be calibrated out. No span effect.
3051L	With liquid level diaphragm in vertical plane, zero shift of up to 1 inH_2O (2,49 mbar). With diaphragm in horizontal plane, zero shift of up to 5 inH_2O (12,43 mbar) plus extension length on extended units. All zero shifts can be calibrated out. No span effect.
3051T/CA	Zero shifts up to 2.5 inH_2O (6,22 mbar), which can be calibrated out. No span effect.

Vibration Effect

All Models

Measurement effect due to vibrations is negligible except at resonance frequencies. When at resonance frequencies, vibration effect is less than ±0.1% of URL per g when tested between 15 and 2000 Hz in any axis relative to pipe-mounted process conditions.

Power Supply Effect

All Models

Less than ±0.005% of calibrated span per volt.

RFI Effects

All Models

±0.1% of span from 20 to 1000 MHz and for field strength up to 30 V/m.

Transient Protection (Option Code T1)

All Models:

Meets IEEE C62.41, Category B

- 6 kV crest (0.5 μs - 100 kHz)
- 3 kV crest (8 × 20 microseconds)
- 6 kV crest (1.2 × 50 microseconds)

Meets IEEE C37.90.1, Surge Withstand Capability

- SWC 2.5 kV crest, 1.25 MHz wave form

General Specifications:

- Response Time: < 1 nanosecond
- Peak Surge Current: 5000 amps to housing
- Peak Transient Voltage: 100 V dc
- Loop Impedance: < 25 ohms
- Applicable Standards: IEC61000-4-4, IEC61000-4-5

NOTE:
Calibrations at 68 °F (20 °C) per ASME Z210.1 (ANSI)

FUNCTIONAL SPECIFICATIONS

Range and Sensor Limits

TABLE 1. 3051CD, 3051CG, 3051L, and 3051H Range and Sensor Limits

Range	Minimum Span		Range and Sensor Limits					
				Lower (LRL)				
	3051CD(1), CG, L, H	Upper (URL)	3051C Differential	3051C/ Gage	3051L Differential	3051L Gage	3051H Differential	3051H Gage
0	0.1 inH_2O (0,25 mbar)	3.0 inH_2O (7,47 mbar)	–3.0 inH_2O (-7,47 mbar)	NA	NA	NA	NA	NA
1	0.5 inH_2O (1,2 mbar)	25 inH_2O (62,3 mbar)	–25 inH_2O (–62,3 mbar)	–25 inH_2O (–62,3 mbar)	NA	NA	NA	NA
2	2.5 inH_2O (6,2 mbar)	250 inH_2O (0,62 bar)	–250 inH_2O (–0,62 bar)	–250 inH_2O (–0,62 bar)	–250 inH_2O (–0,62 bar)	–250 inH_2O (–0,62 bar)	–250 inH_2O (–0,62 bar)	–250 inH_2O (–0,62 bar)
3	10 inH_2O (24,9 mbar)	1000 inH_2O (2,49 bar)	–1000 inH_2O (–2,49 bar)	0.5 psia (34,5 mbar abs)	–1000 inH_2O (–2,49 bar)	0.5 psia (34,5 mbar abs)	–1000 inH_2O (–2,49 bar)	0.5 psia (34,5 mbar abs)
4	3 psi (0,20 bar)	300 psi (20,6 bar)	–300 psi (–20,6 bar)	0.5 psia (34,5 mbar abs)	–300 psi (–20,6 bar)	0.5 psia (34,5 mbar abs)	–300 psi (–20,6 bar)	0.5 psia (34,5 mbar abs)
5	20 psi (1,38 bar)	2000 psi (137,9 bar)	– 2000 psi (–137,9 bar)	0.5 psia (34,5 mbar abs)	NA	NA	– 2000 psi (–137,9 bar)	0.5 psia (34,5 mbar abs)

(1) Range 0 only available with 3051CD. Range 1 only available with 3051CD or 3051CG.

TABLE 2. Range and Sensor Limits

Range	3051CA		
		Range and Sensor Limits	
	Minimum Span	Upper (URL)	Lower (LRL)
1	0.3 psia (20,6 mbar)	30 psia (2,07 bar)	0 psia (0 bar)
2	1.5 psia (0,103 bar)	150 psia (10,3 bar)	0 psia (0 bar)
3	8 psia (0,55 bar)	800 psia (55,2 bar)	0 psia (0 bar)
4	40 psia (2,76 bar)	4000 psia (275,8 bar)	0 psia (0 bar)

Range	3051T			
		Range and Sensor Limits		
	Minimum Span	Upper (URL)	Lower (LRL)	Lower(1) (LRL) (Gage)
1	0.3 psi (20,6 mbar)	30 psi (2,07 bar)	0 psia (0 bar)	–14.7 psig (–1,01 bar)
2	1.5 psi (0,103 bar)	150 psi (10,3 bar)	0 psia (0 bar)	–14.7 psig (–1,01 bar)
3	8 psi (0,55 bar)	800 psi (55,2 bar)	0 psia (0 bar)	–14.7 psig (–1,01 bar)
4	40 psi (2,76 bar)	4000 psi (275,8 bar)	0 psia (0 bar)	–14.7 psig (–1,01 bar)
5	2000 psi (137,9 bar)	10000 psi (689,4 bar)	0 psia (0 bar)	–14.7 psig (–1,01 bar)

(1) Assumes atmospheric pressure of 14.7 psig.

Zero and Span Adjustment Requirements (*HART* and Low Power)

Zero and span values can be set anywhere within the range limits stated in Table 1 and Table 2.

Span must be greater than or equal to the minimum span stated in Table 1 and Table 2.

Service

Liquid, gas, and vapor applications

4–20 mA (Output Code A)

Output

Two-wire 4–20 mA, user-selectable for linear or square root output. Digital process variable superimposed on 4–20 mA signal, available to any host that conforms to the *HART* protocol.

Power Supply

External power supply required. Standard transmitter (4–20 mA) operates on 10.5 to 55 V dc with no load.

Load Limitations

Maximum loop resistance is determined by the voltage level of the external power supply, as described by:

Max. Loop Resistance = 43.5 (Power Supply Voltage – 10.5)

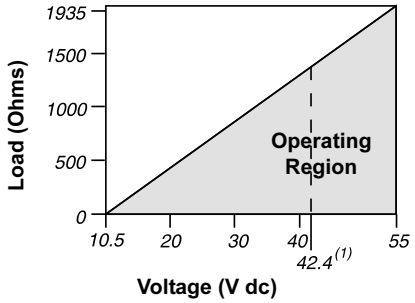

Communication requires a minimum loop resistance of 250 ohms.

(1) For CSA approval, power supply must not exceed 42.4 V.

FOUNDATION fieldbus (output code F) and Profibus (output code W)

Power Supply

External power supply required; transmitters operate on 9.0 to 32.0 V dc transmitter terminal voltage.

Current Draw

17.5 mA for all configurations (including LCD display option)

FOUNDATION fieldbus Function Block Execution Times

Block	Execution Time
Resource	-
Transducer	-
LCD Block	-
Analog Input 1, 2	30 milliseconds
PID	45 milliseconds
Input Selector	30 milliseconds
Arithmetic	35 milliseconds
Signal Characterizer	40 milliseconds
Integrator	35 milliseconds

FOUNDATION fieldbus Parameters

Schedule Entries	7 (max.)
Links	20 (max.)
Virtual Communications Relationships (VCR)	12 (max.)

Standard Function Blocks

Resource Block

Contains hardware, electronics, and diagnostic information.

Transducer Block

Contains actual sensor measurement data including the sensor diagnostics and the ability to trim the pressure sensor or recall factory defaults.

LCD Block

Configures the local display.

2 Analog Input Blocks

Processes the measurements for input into other function blocks. The output value is in engineering units or custom and contains a status indicating measurement quality.

PID Block

Contains all logic to perform PID control in the field including cascade and feedforward.

Backup Link Active Scheduler (LAS)

The transmitter can function as a Link Active Scheduler if the current link master device fails or is removed from the segment.

Advanced Control Function Block Suite (Option Code A01)

Input Selector Block

Selects between inputs and generates an output using specific selection strategies such as minimum, maximum, midpoint, average or first “good.”

Arithmetic Block

Provides pre-defined application-based equations including flow with partial density compensation, electronic remote seals, hydrostatic tank gauging, ratio control and others.

Signal Characterizer Block

Characterizes or approximates any function that defines an input/output relationship by configuring up to twenty X, Y coordinates. The block interpolates an output value for a given input value using the curve defined by the configured coordinates.

Integrator Block

Compares the integrated or accumulated value from one or two variables to pre-trip and trip limits and generates discrete output signals when the limits are reached. This block is useful for calculating total flow, total mass, or volume over time.

FOUNDATION fieldbus Diagnostics Suite (Option Code D01)

The 3051C *FOUNDATION* fieldbus Diagnostics provide Abnormal Situation Prevention (ASP) indictation. The integral statistical process monitoring (SPM) technology calculates the mean and standard deviation of the process variable 22 times per second. The 3051C ASP algorithm uses these values and highly flexible configuration options for customization to many user-defined or application specific abnormal situations. The detection of plugged impulse lines is the first available predefined application.

Low Power (Output Code M)

Output

Three wire 1–5 V dc or 0.8–3.2 V dc (Option Code C2) user-selectable output. Also user selectable for linear or square root output configuration. Digital process variable superimposed on voltage signal, available to any host conforming to the *HART* protocol. Low-power transmitter operates on 6–12 V dc with no load.

Power Consumption

3.0 mA, 18–36 mW

Minimum Load Impedance

100 kΩ (V_{out} wiring)

Indication

Optional 5-digit LCD display

Overpressure Limits

Rosemount 3051CD/CG

- Range 0: 750 psi (51,7 bar)
- Range 1: 2000 psig (137,9 bar)
- Ranges 2–5: 3626 psig (250 bar)
  4500 psig (310,3 bar) for option code P9

Rosemount 3051CA

- Range 1: 750 psia (51,7 bar)
- Range 2: 1500 psia (103,4 bar)
- Range 3: 1600 psia (110,3 bar)
- Range 4: 6000 psia (413,7 bar)

Rosemount 3051H

- All Ranges: 3626 psig (25 MPa)

Rosemount 3051TG/TA

- Range 1: 750 psi (51,7 bar)
- Range 2: 1500 psi (103,4 bar)
- Range 3: 1600 psi (110,3 bar)
- Range 4: 6000 psi (413,7 bar)
- Range 5: 15000 psi (1034,2 bar)

For 3051L or Level Flange Option Codes FA, FB, FC, FD, FP, and FQ, limit is 0 psia to the flange rating or sensor rating, whichever is lower.

TABLE 3. 3051L and Level Flange Rating Limits

Standard	Type	CS Rating	SST Rating
ANSI/ASME	Class 150	285 psig	275 psig
ANSI/ASME	Class 300	740 psig	720 psig
ANSI/ASME	Class 600	1480 psig	1440 psig
At 100 °F (38 °C), the rating decreases with increasing temperature.			
DIN	PN 10–40	40 bar	40 bar
DIN	PN 10/16	16 bar	16 bar
DIN	PN 25/40	40 bar	40 bar
At 248 °F (120 °C), the rating decreases with increasing temperature.			

Static Pressure Limit

Rosemount 3051CD Only

Operates within specifications between static line pressures of 0.5 psia and 3626 psig (4500 psig for Option Code P9).

Range 0: 0.5 psia and 750 psig

Range 1: 0.5 psia and 2000 psig

Burst Pressure Limits

Burst pressure on *Coplanar*, traditional, or 3051H process flange is 10000 psig (69 MPa).

Burst pressure for the 3051T is

Ranges 1–4: 11000 psi (75,8 MPa)

Range 5: 26000 psig (179 MPa)

Failure Mode Alarm

Output Code A

If self-diagnostics detect a gross transmitter failure, the analog signal will be driven either below 3.75 mA or to 21.75 mA to alert the user. NAMUR-compliant values are available, option code C4. High or low alarm signal is user-selectable by internal jumper.

Output Code M

If self-diagnostics detect a gross transmitter failure, the analog signal will be driven either below 0.94 V or above 5.4 V to alert the user (below 0.75 V or above 4.4 V for Option C2). High or low alarm signal is user-selectable by internal jumper.

Output Code F and W

If self-diagnostics detect a gross transmitter failure, that information gets passed as a status along with the process variable.

Temperature Limits

Ambient

–40 to 185 °F (–40 to 85 °C)

With integral meter: –4 to 175 °F (–20 to 80 °C)

Storage

–50 to 230 °F (–46 to 110 °C)

With integral meter: –40 to 185 °F (–40 to 85 °C)

Process

At atmospheric pressures and above. See Table 4

TABLE 4. 3051 Process Temperature Limits

3051CD, 3051CG, 3051CA	
Silicone Fill Sensor(1)	
with *Coplanar* Flange	–40 to 250 °F (–40 to 121 °C)(2)
with Traditional Flange	–40 to 300 °F (–40 to 149 °C)(2)(3)
with Level Flange	–40 to 300 °F (–40 to 149 °C)(2)
with 305 Integral Manifold	–40 to 300 °F (–40 to 149 °C)(2)
Inert Fill Sensor(1)	0 to 185 °F (–18 to 85 °C)(4)(5)
3051H (Process Fill Fluid)	
D.C.® Silicone 200(1)	–40 to 375 °F (–40 to 191 °C)
Inert(1)	–50 to 350 °F (–45 to 177 °C)
Neobee M-20®(1)	0 to 375 °F (–18 to 191 °C)
3051T (Process Fill Fluid)	
Silicone Fill Sensor(1)	–40 to 250 °F (–40 to 121 °C)(2)
Inert Fill Sensor(1)	–22 to 250 °F (–30 to 121 °C)(2)
3051L Low-Side Temperature Limits	
Silicone Fill Sensor(1)	–40 to 250 °F (–40 to 121 °C)(2)
Inert Fill Sensor(1)	0 to 185 °F (–18 to 85 °C)(2)
3051L High-Side Temperature Limits (Process Fill Fluid)	
Syltherm® XLT	–100 to 300 °F (–73 to 149 °C)
D.C. Silicone 704®	60 to 400 °F (15 to 205 °C)
D.C. Silicone 200	–40 to 400 °F (–40 to 205 °C)
Inert	–50 to 350 °F (–45 to 177 °C)
Glycerin and Water	0 to 200 °F (–18 to 93 °C)
Neobee M-20	0 to 400 °F (–18 to 205 °C)
Propylene Glycol and Water	0 to 200 °F (–18 to 93 °C)

(1) Process temperatures above 185 °F (85 °C) require derating the ambient limits by a 1.5:1 ratio (0.6:1 ratio for the 3051H).

(2) 220 °F (104 °C) limit in vacuum service; 130 °F (54 °C) for pressures below 0.5 psia.

(3) 3051CD0 process temperature limits are –40 to 212 °F (–45 to 100 °C)

(4) 160 °F (71 °C) limit in vacuum service.

(5) Not available for 3051CA.

Humidity Limits

0–100% relative humidity

Turn-On Time

Performance within specifications less than 2.0 seconds (10.0 s for Profibus protocol) after power is applied to the transmitter

Volumetric Displacement

Less than 0.005 in^3 (0,08 cm^3)

Damping

Analog output response to a step input change is user-selectable from 0 to 36 seconds for one time constant. This software damping is in addition to sensor module response time.

PHYSICAL SPECIFICATIONS

Electrical Connections

1/2–14 NPT, PG 13.5, G1/2, and M20 × 1.5 (CM20) conduit. *HART* interface connections fixed to terminal block.

Process Connections

All Models except 3051L and 3051T

1/4–18 NPT on 2 1/8-in. centers

1/2–14 NPT on 2-, 2 1/8-, or 2 1/4-in. centers

Rosemount 3051L

High pressure side: 2-, 3-, or 4-in., ASME B 16.5 (ANSI) Class 150, 300 or 600 flange; 50, 80 or 100 mm, PN 40 or 10/16 flange

Low pressure side: 1/4–18 NPT on flange 1/2–14 NPT on adapter

Rosemount 3051T

1/2–14 NPT female. A DIN 16288 Male (available in SST for Range 1–4 transmitters only), or Autoclave type F-250-C (Pressure relieved 9/16–18 gland thread; 1/4 OD high pressure tube 60° cone; available in SST for Range 5 transmitters only).

Process-Wetted Parts

Drain/Vent Valves

316 SST, *Hastelloy* C276, or *Monel* material (*Monel* not available with 3051L or 3051H)

Process Flanges and Adapters

Plated carbon steel, SST cast CF-8M (cast version of 316 SST, material per ASTM-A743), C-Type cast alloy CW12MW, or *Monel* cast alloy M30C

Wetted O-rings

Glass-filled PTFE or Graphite-filled PTFE

Process Isolating Diaphragms

Isolating Diaphragm Material	3051CD/CG	3051T	3051CA	3051H
316L SST	•	•	•	•
Hastelloy C276	•	•	•	•
Monel	•		•	
Tantalum	•			•
Gold-plated *Monel*	•		•	
Gold-plated SST	•		•	

Rosemount 3051L Process Wetted Parts

Flanged Process Connection (Transmitter High Side)

Process Diaphragms, Including Process Gasket Surface

- 316L SST, *Hastelloy* C276, or Tantalum

Extension

- CF-3M (Cast version of 316L SST, material per ASTM-A743), or *Hastelloy* C276. Fits schedule 40 and 80 pipe.

Mounting Flange

- Zinc-cobalt plated CS or SST

Reference Process Connection (Transmitter Low Side)

Isolating Diaphragms

- 316L SST or *Hastelloy* C276

Reference Flange and Adapter

- CF-8M (Cast version of 316 SST, material per ASTM-A743)

Non-Wetted Parts

Electronics Housing

Low-copper aluminum or CF-3M (Cast version of 316L SST, material per ASTM-A743). NEMA 4X, IP 65, IP 66

Coplanar Sensor Module Housing

CF-3M (Cast version of 316L SST, material per ASTM-A743)

Bolts

ASTM A449, Type 1 (zinc-cobalt plated carbon steel)
ASTM F593G, Condition CW1 (Austenitic 316 SST)
ASTM A193, Grade B7M (zinc plated alloy steel)
Monel K-500

Sensor Module Fill Fluid

Silicone oil (D.C. 200) or Fluorocarbon oil (Halocarbon or Fluorinert® FC-43 for 3051T)

Process Fill Fluid (3051L and 3051H only)

3051L: Syltherm XLT, D.C. Silicone 704, D.C. Silicone 200, inert, glycerin and water, Neobee M-20 or propylene glycol and water

3051H: inert, Neobee M-20, or D.C. Silicone 200

Paint

Polyurethane

Cover O-rings

Buna-N

Shipping Weights

Refer to “Shipping Weights” on page 38

Product Certifications

Approved Manufacturing Locations

Rosemount Inc. — Chanhassen, Minnesota USA
Emerson Process Management GmbH & Co. — Wessling, Germany
Emerson Process Management Asia Pacific
Private Limited — Singapore
Beijing Rosemount Far East Instrument Co., LTD — Beijing, China

European Directive Information

The EC declaration of conformity for all applicable European directives for this product can be found on the Rosemount website at www.rosemount.com. A hard copy may be obtained by contacting an Emerson Process Management representative.

ATEX Directive (94/9/EC)
All 3051 transmitters comply with the ATEX Directive.

European Pressure Equipment Directive (PED) (97/23/EC)
3051CA4; 3051CG2, 3, 4, 5; 3051CD2, 3, 4, 5 *(also with P9 option)*; 3051HD2, 3, 4, 5; 3051HG2, 3, 4, 5; 3051PD2, 3; and 3051PG2, 3, 4, 5 Pressure Transmitters
— QS Certificate of Assessment - EC No. PED-H-20
Module H Conformity Assessment

All other 3051/3001 Pressure Transmitters
— Sound Engineering Practice

Transmitter Attachments: Diaphragm Seal - Process Flange - Manifold
— Sound Engineering Practice

Electro Magnetic Compatibility (EMC) (89/336/EEC)
All 3051 Pressure Transmitters meet all of the requirements of IECEN61326 and NAMUR NE-21

Ordinary Location Certification for Factory Mutual
As standard, the transmitter has been examined and tested to determine that the design meets basic electrical, mechanical, and fire protection requirements by FM, a nationally recognized testing laboratory (NRTL) as accredited by the Federal Occupational Safety and Health Administration (OSHA).

HART PROTOCOL

Hazardous Locations Certifications

North American Certifications

FM Approvals

E5 Explosion-Proof for Class I, Division 1, Groups B, C, and D. Dust-Ignition-Proof for Class II, Division 1, Groups E, F, and G. Dust-Ignition-Proof for Class III, Division 1.
T5 (Ta = 85 °C), Factory Sealed, Enclosure Type 4X

I5 Intrinsically Safe for use in Class I, Division 1, Groups A, B, C, and D; Class II, Division 1, Groups E, F, and G; Class III, Division 1 when connected per Rosemount drawing 03031-1019; Non-incendive for Class I, Division 2, Groups A, B, C, and D.
Temperature Code:T4 (Ta = 40 °C), T3 (Ta = 85 °C), Enclosure Type 4X
For input parameters see control drawing 03031-1019.

Canadian Standards Association (CSA)

E6 Explosion-Proof for Class I, Division 1, Groups B, C, and D. Dust-Ignition-Proof for Class II and Class III, Division 1, Groups E, F, and G. Suitable for Class I, Division 2 Groups A, B, C, and D for indoor and outdoor hazardous locations. Enclosure type 4X, factory sealed

C6 Explosion-Proof and intrinsically safe approval. Intrinsically safe for Class I, Division 1, Groups A, B, C, and D when connected in accordance with Rosemount drawings 03031-1024. Temperature Code T3C.
Explosion-Proof for Class I, Division 1, Groups B, C, and D. Dust-Ignition-Proof for Class II and Class III, Division 1, Groups E, F, and G. Suitable for Class I, Division 2 Groups A, B, C, and D hazardous locations. Enclosure type 4X, factory sealed
For input parameters see control drawing 03031-1024.

European Certifications

I1 ATEX Intrinsic Safety and Dust
Certification No.: BAS 97ATEX1089X Ⓔx II 1 GD
EEx ia IIC T5 (–60 ≤ T_a ≤ +40 °C)
EEx ia IIC T4 (–60 ≤ T_a ≤ +70 °C)
Dust Rating: T80 °C (–20 ≤ T_a ≤ 40 °C) IP66
CE 1180

TABLE 5. Input Parameters

U_i = 30V
I_i = 200 mA
P_i = 0.9W
C_i = 0.012 µF

Special Conditions for Safe Use (X):
When the optional transient protection terminal block is installed, the apparatus is not capable of withstanding the 500V insulation test required by Clause 6.4.12 of EN50020:1994. This must be taken into account when installing the apparatus.

N1 ATEX Type n and Dust
Certification No.: BAS 00ATEX3105X Ⓔx II 3 GD
EEx nL IIC T5 (–40 ≤ T_a ≤ +70 °C)
U_i = 55 Vdc max
Dust rating: T80 °C (–20 ≤ T_a ≤ 40 °C) IP66
CE

Special Conditions for Safe Use (X):
When the optional transient protection terminal block is installed, the apparatus is not capable of withstanding a 500V r.m.s. test to case. This must be taken into account on any installation in which it is used, for example by assuring that the supply to the apparatus is galvanically isolated.

E8 ATEX Flame-Proof and Dust
Certification No.: KEMA 00ATEX2013X Ⓔx II 1/2 GD
EEx d IIC T6 (–50 ≤ T_a ≤ 65 °C)
EEx d IIC T5 (–50 ≤ T_a ≤ 80 °C)
Dust rating T90 °C, IP66
CE 1180
Vmax = 55 V dc

Special Conditions for Safe Use (X):
This device contains a thin wall diaphragm. Installation, maintenance, and use shall take into account the environmental conditions to which the diaphragm will be subjected. The manufacturer's instructions for installation and maintenance shall be followed in detail to assure safety during its expected lifetime.

Japanese Certifications

E4 JIS Flame-Proof
Ex d IIC T6

Certificate	Description
C15850	3051C/D/1 4–20 mA *HART* — no meter
C15851	3051C/D/1 4–20 mA *HART* — with meter
C15854	3051T/G/1 4–20 mA *HART*, SST, Silicon — no meter
C15855	3051T/G/1 4–20 mA *HART*, *Hastelloy* C276, Silicon — no meter
C15856	3051T/G/1 4–20 mA *HART*, SST, Silicon — with meter
C15857	3051T/G/1 4–20 mA *HART*, *Hastelloy* C276, Silicon — with meter

I4 JIS Intrinsic Safety
Ex ia IIC T4

Certificate	Description
C16406	3051CD/CG

Australian Certifications

I7 SAA Intrinsic Safety
Certification No.: AUS Ex 1249X
Ex ia IIC T4 (T_{amb} = 70 °C)
Ex ia IIC T5 (T_{amb} = 40 °C)
IP66
When connected per Rosemount drawing 03031-1026

TABLE 6. Input Parameters

U_i = 30V
I_i = 200 mA
I_i = 160 mA (output code A with T1)
P_i = 0.9W
C_i = 0.01 µF
C_i = 0.042 µF (output code M)
L_i = 10 µH
L_i = 1.05 mH (output code A with T1)
L_i = 0.75 mH (output code M with T1)

Special Conditions for Safe Use (X):
The apparatus may only be used with a passive current limited power source Intrinsic Safety application. The power source must be such that Po ≤ (Uo * Io) / 4. Modules using transient protection in the terminal assembly (T1 transient protection models) the apparatus enclosure is to be electrically bonded to the protective earth. The conductor used for the connection shall be equivalent to a copper conductor of 4 mm2 minimum cross-sectional area.

E7 SAA Explosion-Proof (Flame-Proof)
Certification No.: AUS Ex 03.1347X
Ex d IIC T6 (T_{amb} = 40 °C)
Ex d IIC T5 (T_{amb} = 80 °C)
DIP A21 T6 (T_{amb} = 40 °C)
DIP A21 T5 (T_{amb} = 80 °C)
IP66

Special Conditions for Safe Use (X):
It is a condition of safe use for transmitter enclosures having cable entry thread other than metric conduit thread that the equipment be utilized with an appropriate certified thread adaptor.

N7 SAA Type n (Non-sparking)
Certification No.: AUS Ex 1249X
Ex n IIC T4 (T_{amb} = 70 °C)
Ex n IIC T5 (T_{amb} = 40 °C)
IP66

Special Conditions for Safe Use (X):
Where the equipment is installed such that there is an unused conduit entry, it must be sealed with a suitable blanking plug to maintain the IP40 degree of protection. Any blanking plug used with the equipment shall be of a type which requires the use of a tool to effect its removal. Voltage source shall not exceed 60V ac or 75V dc.

Combinations of Certifications

Stainless steel certification tag is provided when optional approval is specified. Once a device labeled with multiple approval types is installed, it should not be reinstalled using any other approval types. Permanently mark the approval label to distinguish it from unused approval types.

K5 **E5** and **I5** combination

KB **K5** and **C6** combination

KD **K5**, **C6**, **I1**, and **E8** combination

K6 **C6**, **I1**, and **E8** combination

K8 **E8** and **I1** combination

K7 **E7**, **I7**, and **N7** combination

FIELDBUS PROTOCOL

Hazardous Locations Certifications

North American Certifications

FM Approvals

E5 Explosion-Proof for Class I, Division 1, Groups B, C, and D. Dust-Ignition-Proof for Class II, Division 1, Groups E, F, and G. Dust-Ignition-Proof for Class III, Division 1.

T5 (Ta = 85 °C), Factory Sealed, Enclosure Type 4X

I5 Intrinsically Safe for use in Class I, Division 1, Groups A, B, C, and D; Class II, Division 1, Groups E, F, and G; Class III, Division 1 when connected per Rosemount drawing 03031-1019; Non-incendive for Class I, Division 2, Groups A, B, C, and D.

Temperature Code:T4 (Ta = 40 °C), T3 (Ta = 85 °C), Enclosure Type 4X
For input parameters see control drawing 03031-1019.

Canadian Standards Association (CSA)

E6 Explosion-Proof for Class I, Division 1, Groups B, C, and D. Dust-Ignition-Proof for Class II and Class III, Division 1, Groups E, F, and G. Suitable for Class I, Division 2 Groups A, B, C, and D for indoor and outdoor hazardous locations. Enclosure type 4X, factory sealed

C6 Explosion-Proof and intrinsically safe approval. Intrinsically safe for Class I, Division 1, Groups A, B, C, and D when connected in accordance with Rosemount drawings 03031-1024. Temperature Code T3C.
Explosion-Proof for Class I, Division 1, Groups B, C, and D. Dust-Ignition-Proof for Class II and Class III, Division 1, Groups E, F, and G. Suitable for Class I, Division 2 Groups A, B, C, and D hazardous locations. Enclosure type 4X, factory sealed
For input parameters see control drawing 03031-1024.

European Certifications

I1 ATEX Intrinsic Safety and Dust
Certification No.: BAS 98ATEX1355X Ⓔx II 1 GD
EEx ia IIC T4 (T_{amb} = –60 to +60 °C)
Dust Rating: T70 °C (T_{amb} –20 to 40 °C) IP66
CE 1180

TABLE 7. Input Parameters

U_i = 30V
I_i = 300 mA
P_i = 1.3 W
C_i = 0 µF

Special Conditions for Safe Use (X):
The device is not capable of withstanding the 500V insulation test required by Clause 6.4.12 of EN50020:1994. This must be taken into account when installing the apparatus.

IA ATEX FISCO Intrinsic Safety
Certification No.: BAS 98ATEX1355X Ⓔx II 1 G
EEx ia IIC T4 (T_{amb} = –60 to +60 °C)
IP66
CE 1180

TABLE 8. Input Parameters

U_i = 17.5 V
I_i = 380 mA
P_i = 5.32 W
C_i = ≤ 5 µF
L_i = ≤ 10 µH

Special Conditions for Safe Use (X):
The device is not capable of withstanding the 500V insulation test required by Clause 6.4.12 of EN50020:1994. This must be taken into account when installing the apparatus.

N1 ATEX Type n and Dust
Certification No.: BAS 98ATEX3356X Ⓔx II 3 GD
EEx nL IIC T5 (T_{amb} = –40 to +70 °C)
U_i = 40 Vdc max
Dust rating: T80 °C (T_{amb} = –20 to 40 °C) IP66

Special Conditions for Safe Use (X):
The device is not capable of withstanding the 500V insulation test required by Clause 6.4.12 of EN50020:1994. This must be taken into account when installing the apparatus.

E8 ATEX Flame-Proof and Dust
Certification No.: KEMA 00ATEX2013X Ⓔx II 1/2 GD
EEx d IIC T6 (T_{amb} = –50 to 65 °C)
EEx d IIC T5 (T_{amb} = –50 to 80 °C)
Dust rating T90 °C, IP66
CE 1180
Vmax = 55 V dc

Special Conditions for Safe Use (X):
This device contains a thin wall diaphragm. Installation, maintenance, and use shall take into account the environmental conditions to which the diaphragm will be subjected. The manufacturer's instructions for installation and maintenance shall be followed in detail to assure safety during its expected lifetime.

Japanese Certifications

E4 JIS Flame-Proof
Ex d IIC T6

Certificate	Description
C15852	3051C/D/1 *FOUNDATION* Fieldbus — no meter
C15853	3051C/D/1 *FOUNDATION* Fieldbus — with meter
C15858	3051T/G/1 *FOUNDATION* Fieldbus, SST, Silicon — no meter
C15859	3051T/G/1 *FOUNDATION* Fieldbus, *Hastelloy* C276, Silicon — no meter
C15860	3051T/G/1 *FOUNDATION* Fieldbus, SST, Silicon — with meter
C15861	3051T/G/1 *FOUNDATION* Fieldbus, *Hastelloy* C276, Silicon — with meter

Australian Certifications

I7 SAA Intrinsic Safety
Certification No.: AUS Ex 1249X
Ex ia IIC T4 (T_{amb} = 60 °C)
IP66
When connected per Rosemount drawing 03031-1026.

TABLE 9. Input Parameters

U_i = 30 V
I_i = 300 mA
P_i = 1.3 W
C_i = 0 µF
L_i = 0 µH

Special Conditions for Safe Use (X):
The apparatus may only be used with a passive current limited power source Intrinsic Safety application. The power source must be such that Po ≤ (Uo * Io) / 4. Modules using transient protection in the terminal assembly (T1 transient protection models) the apparatus enclosure is to be electrically bonded to the protective earth. The conductor used for the connection shall be equivalent to a copper conductor of 4 mm2 minimum cross-sectional area.

E7 SAA Explosion-Proof (Flame-Proof)
Certification No.: AUS Ex 1347X
Ex d IIC T6 (T_{amb} = 40 °C)
Ex d IIC T5 (T_{amb} = 80 °C)
DIP A21 T6 (T_{amb} = 40 °C)
DIP A21 T5 (T_{amb} = 80 °C)
IP65

Special Conditions for Safe Use (X):
It is a condition of safe use for transmitter enclosures having cable entry thread other than metric conduit thread that the equipment be utilized with an appropriate certified thread adaptor.

N7 SAA Type n (Non-sparking)
Certification No.: AUS Ex 1249X
Ex n IIC T4 (T_{amb} = 70 °C)
Ex n IIC T5 (T_{amb} = 40 °C)
IP66

Special Conditions for Safe Use (X):
Where the equipment is installed such that there is an unused conduit entry, it must be sealed with a suitable blanking plug to maintain the IP40 degree of protection. Any blanking plug used with the equipment shall be of a type which requires the use of a tool to effect its removal. Voltage source shall not exceed 60V ac or 75V dc.

Combinations of Certifications

Stainless steel certification tag is provided when optional approval is specified. Once a device labeled with multiple approval types is installed, it should not be reinstalled using any other approval types. Permanently mark the approval label to distinguish it from unused approval types.

K5 **E5** and **I5** combination
KB **K5** and **C6** combination
KD **K5**, **C6**, **I1**, and **E8** combination
K6 **C6**, **I1**, and **E8** combination
K8 **E8** and **I1** combination
K7 **E7**, **I7**, and **N7** combination

Dimensional Drawings

3051 Exploded View

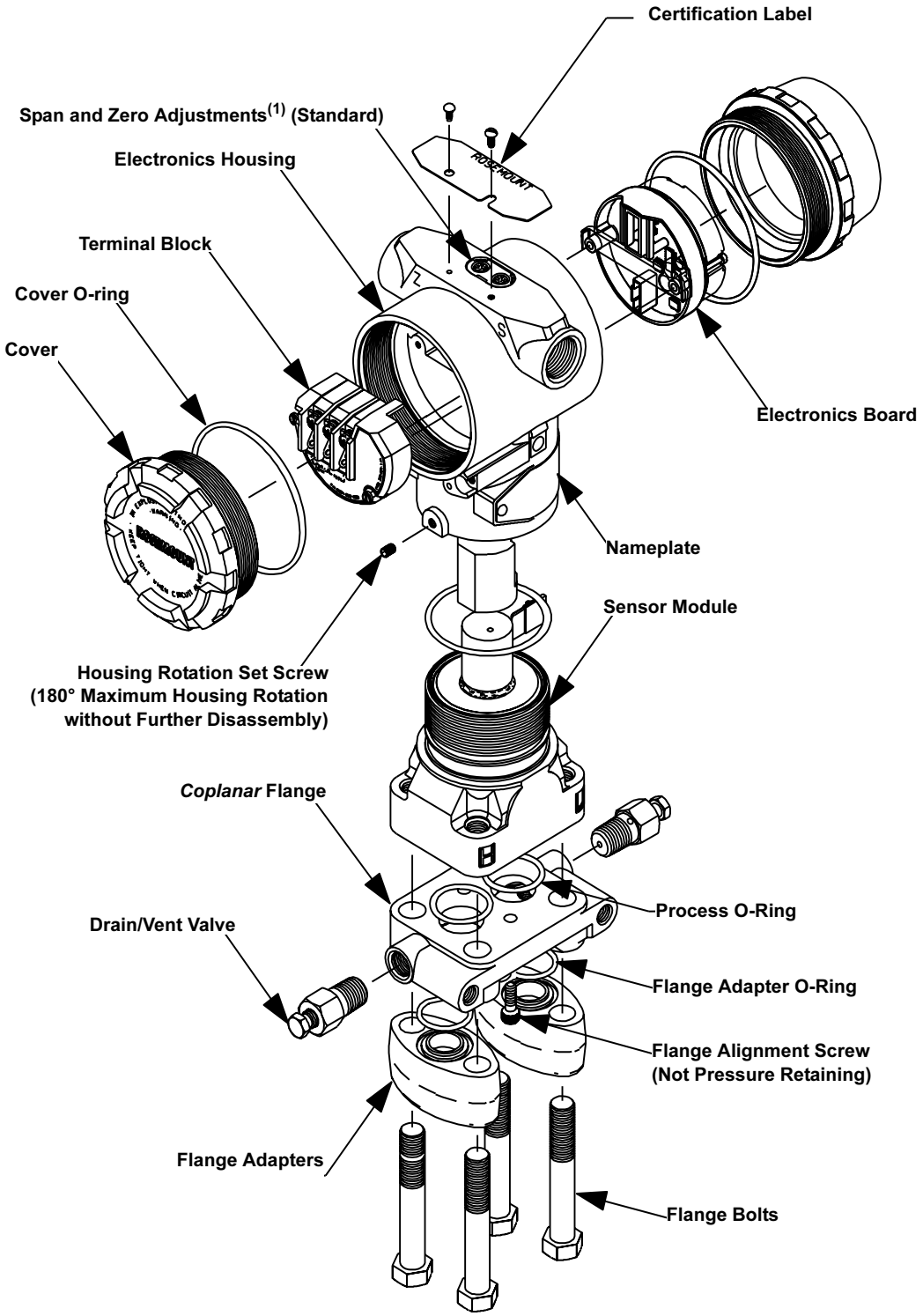

1) Span and Zero Adjustments are not available with fieldbus or profibus protocols.

3051C *Coplanar* Flange Dimensional Drawing (Differential Pressure Transmitter Shown)

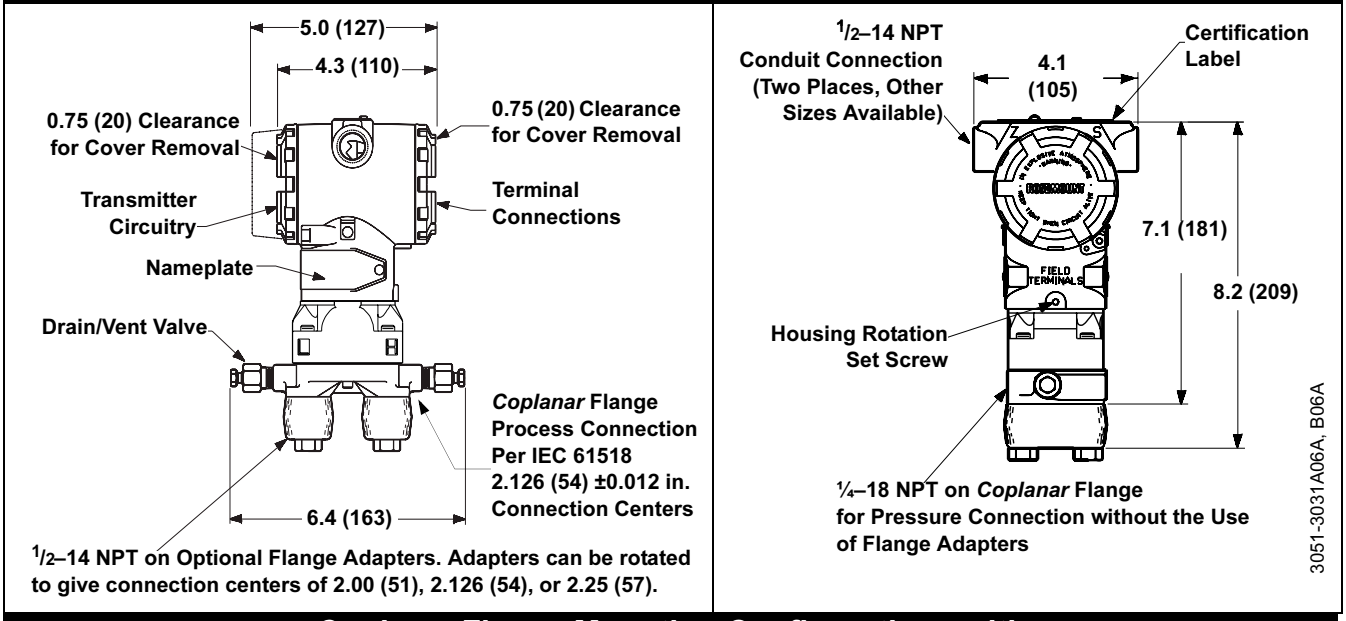

Coplanar Flange Mounting Configurations with Optional Bracket (B4) for 2-in. Pipe or Panel Mounting

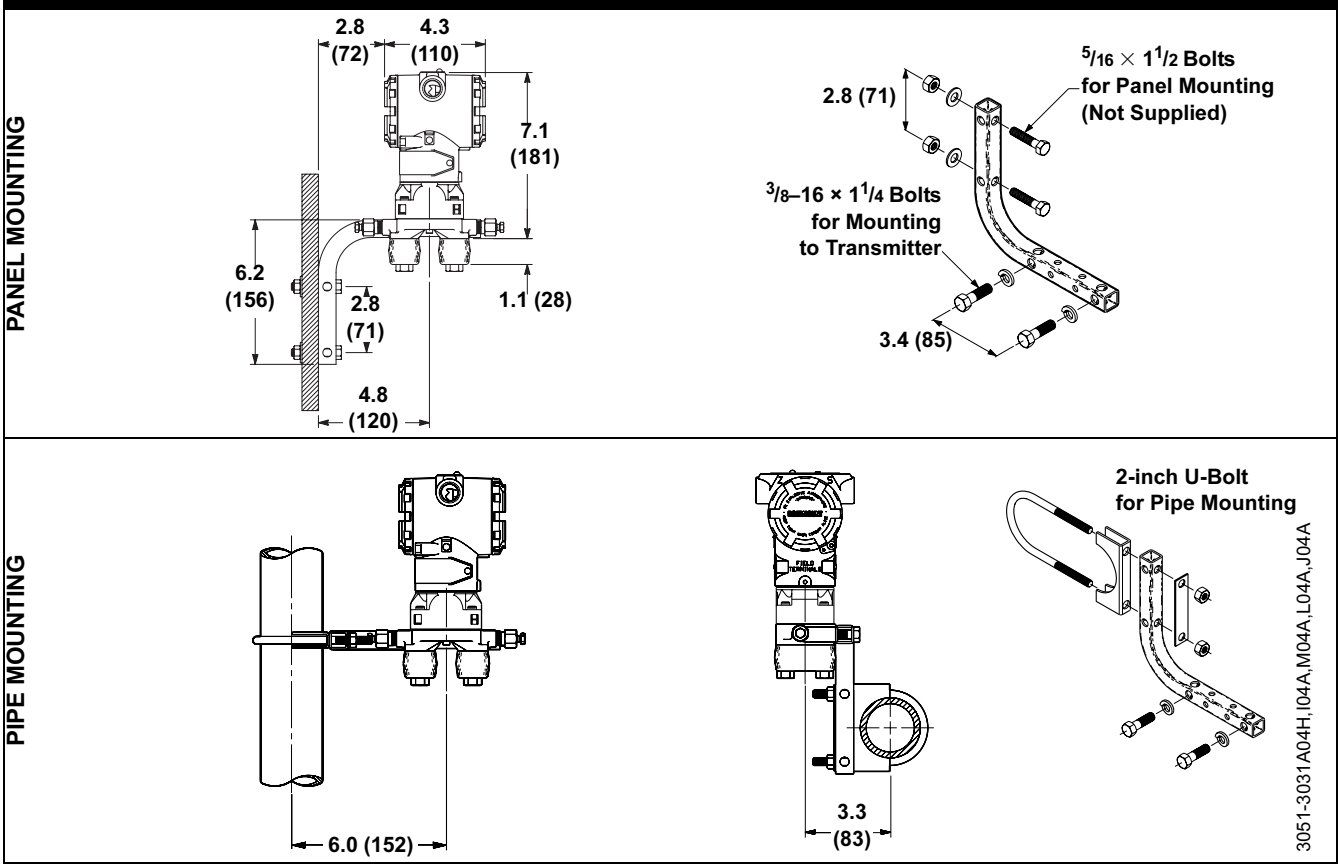

Dimensions are in inches (millimeters)

Traditional Flange Mounting Configurations with Optional Brackets for 2-in. Pipe or Panel Mounting

Traditional Flange Panel Mounting Bracket (option B2/B8) | **Traditional Flange 2-in. Pipe Mounting Bracket (option B1/B7/BA)**

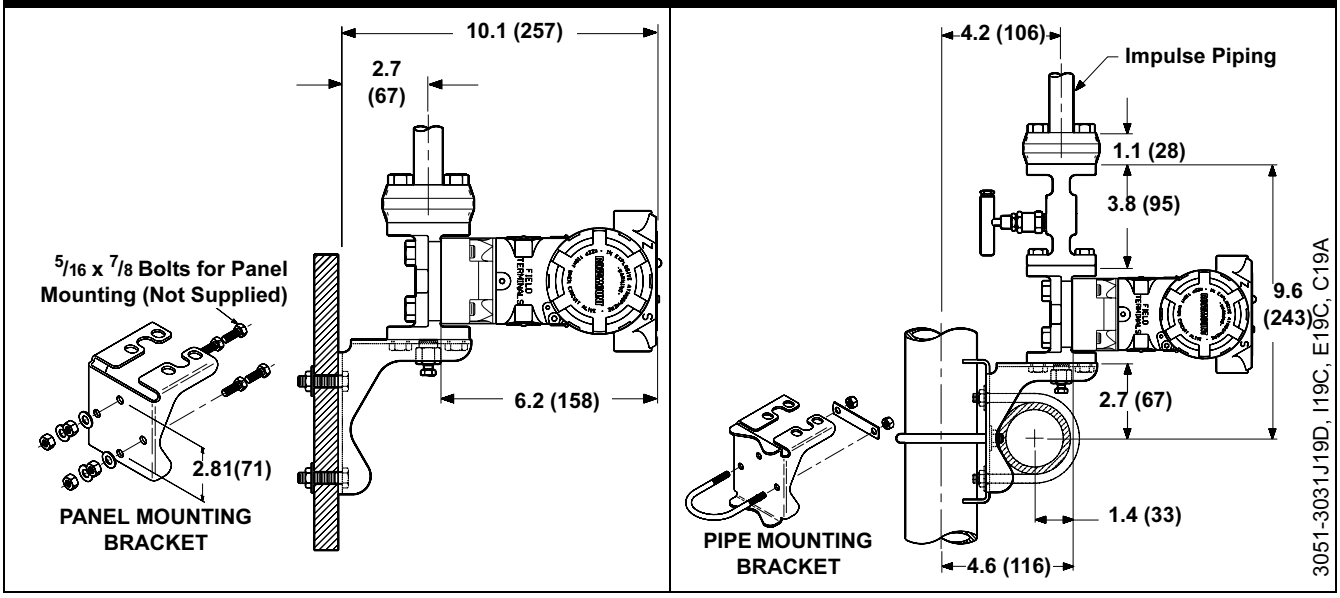

Traditional Flange (Options H2–H7) Dimensional Drawing

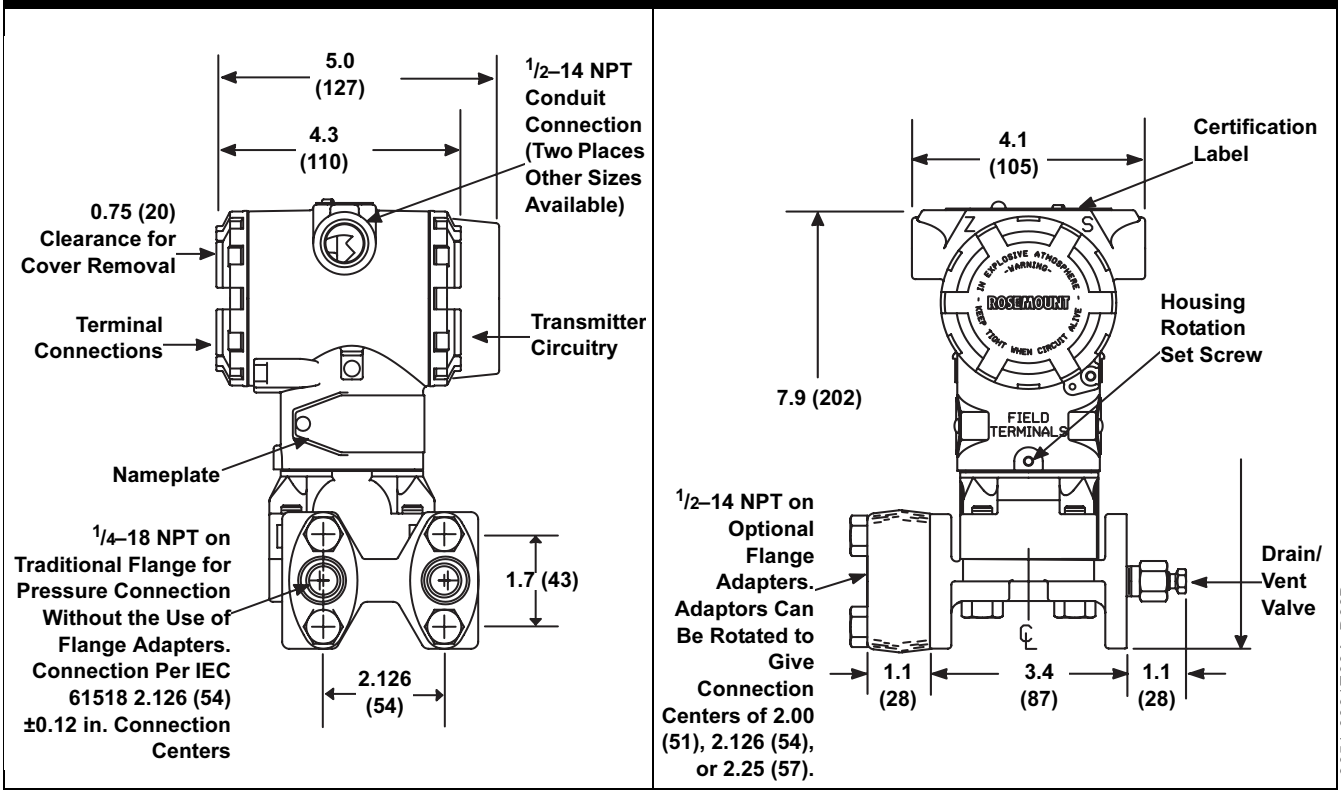

Dimensions are in inches (millimeters)

3051T Dimensional Drawings

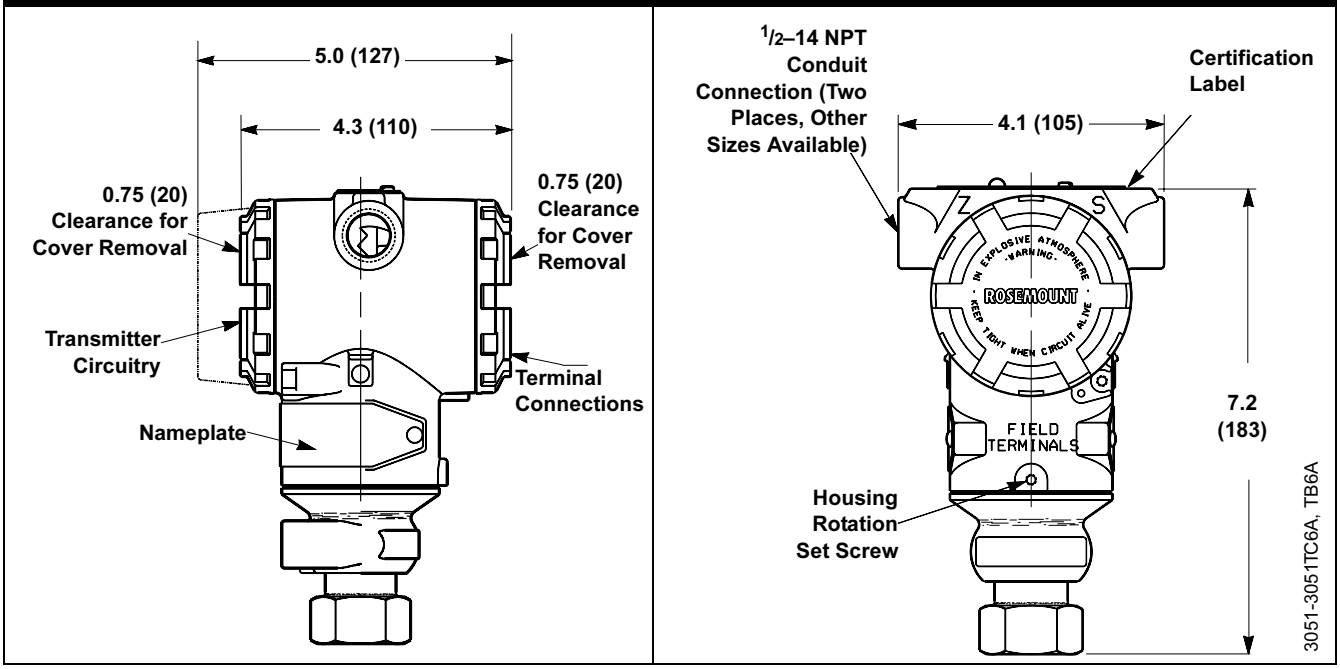

3051T Typical Mounting Configurations with Optional Mounting Bracket

Pipe Mounting | **Panel Mounting**

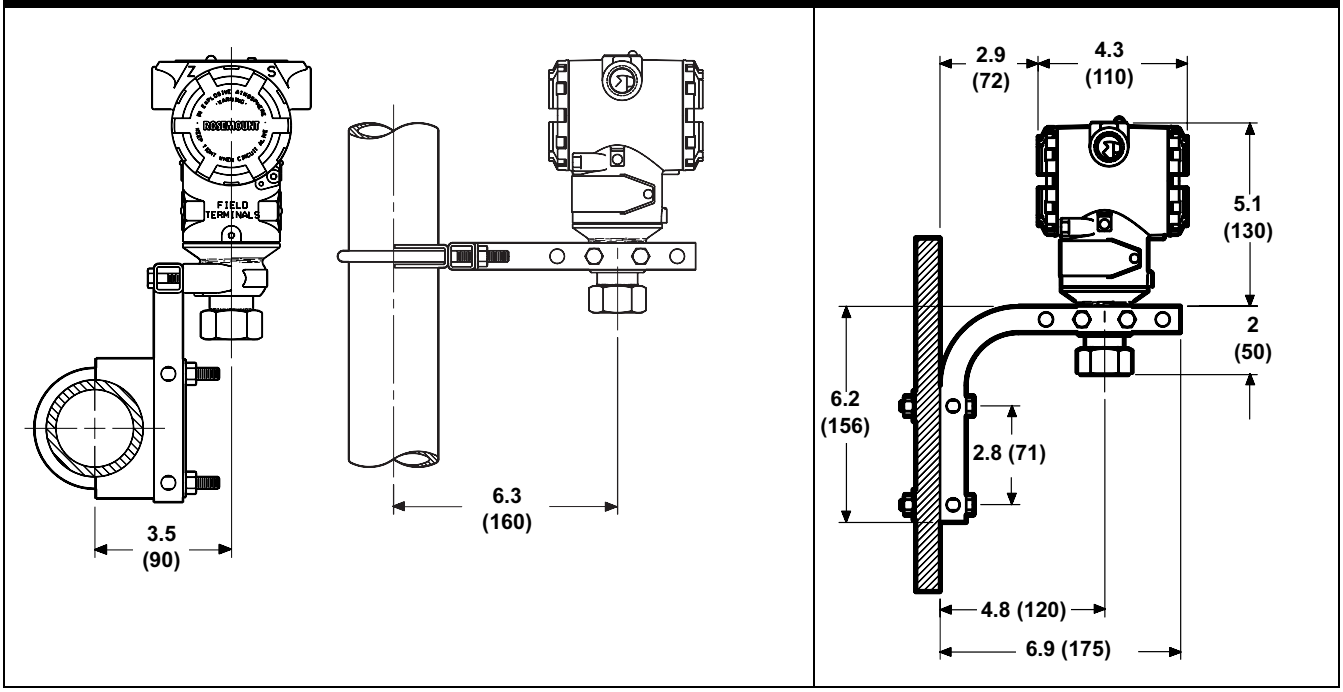

Dimensions are in inches (millimeters)

3051H Pressure Transmitter Exploded View and Dimensional Drawings

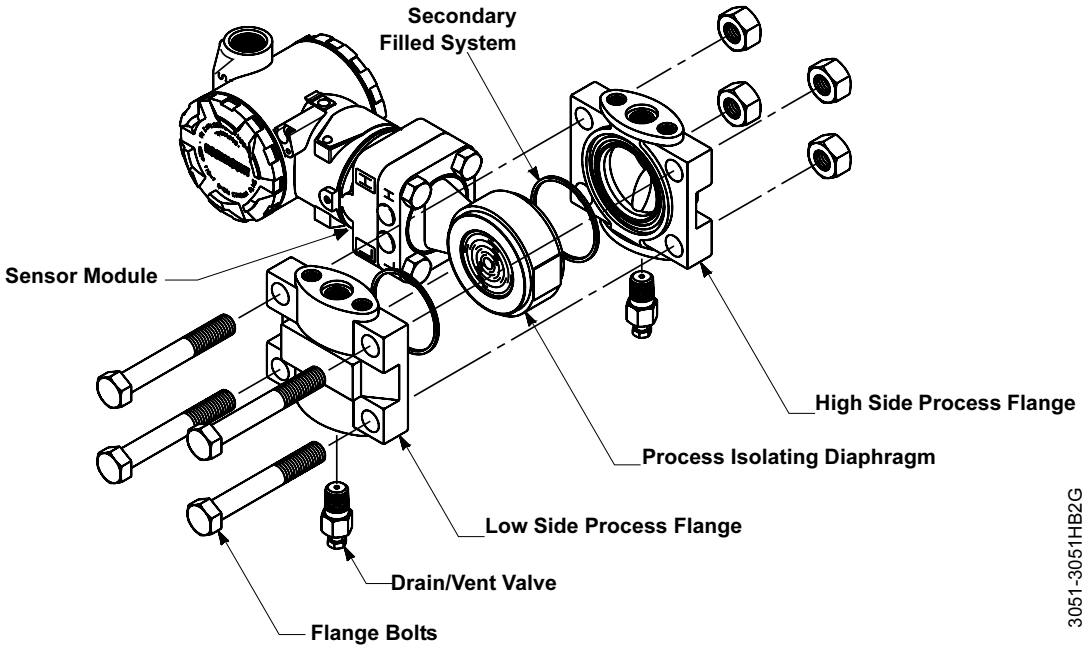

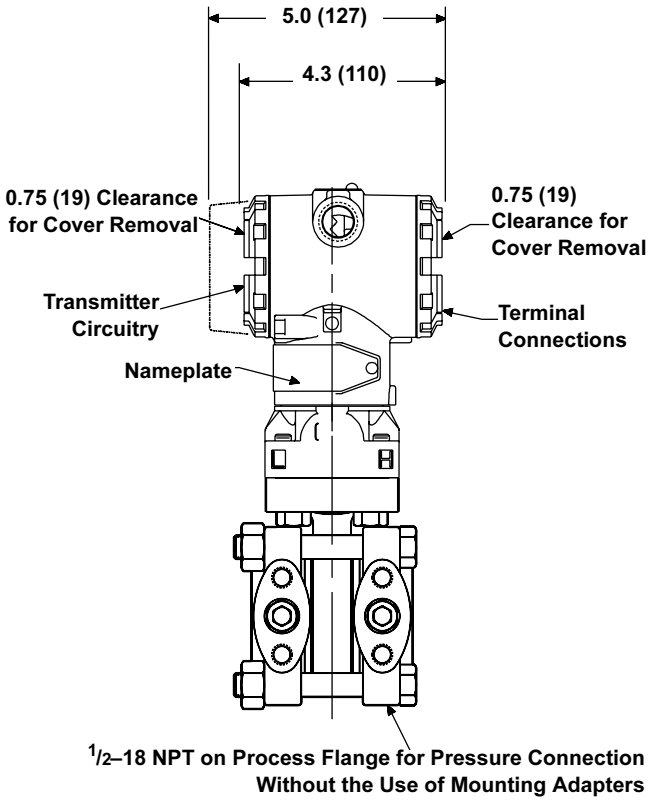

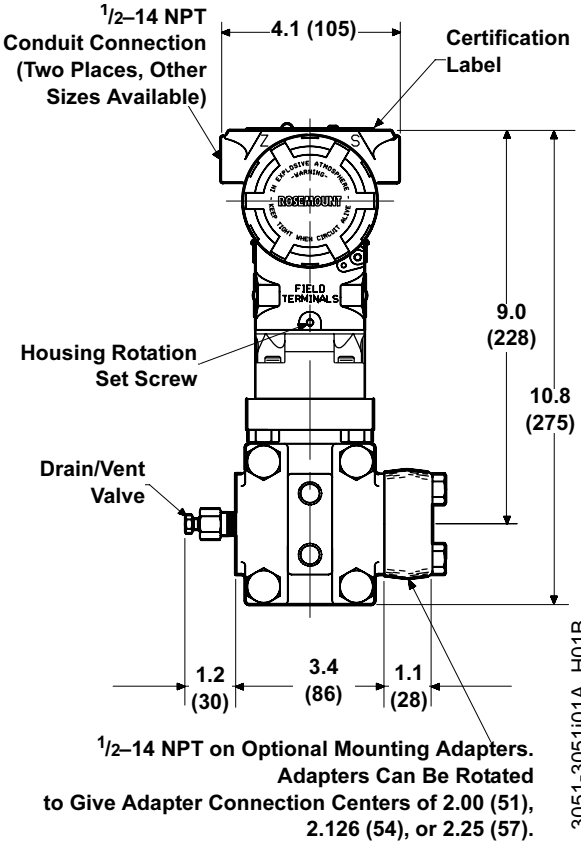

Dimensions are in inches (millimeters)

3051H Mounting Brackets for 2-in. Pipe and Panel Mount (Option Code B5/B6)

PIPE MOUNTING CONFIGURATIO

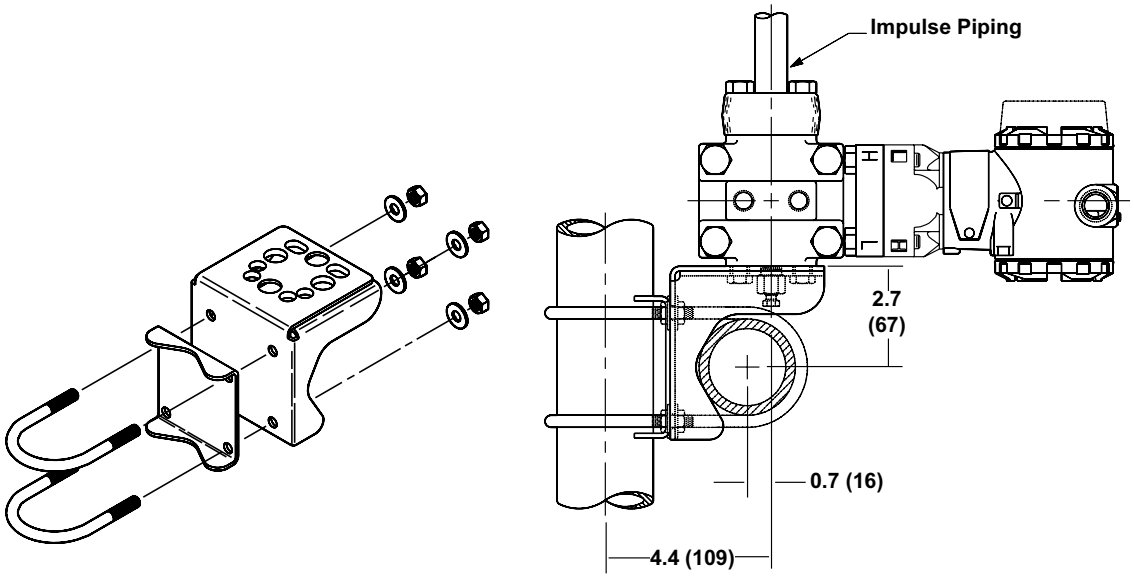

PANEL MOUNTING CONFIGURATION
7/16–20 × 3/4 Bolts Supplied for Attaching Bracket to Transmitter

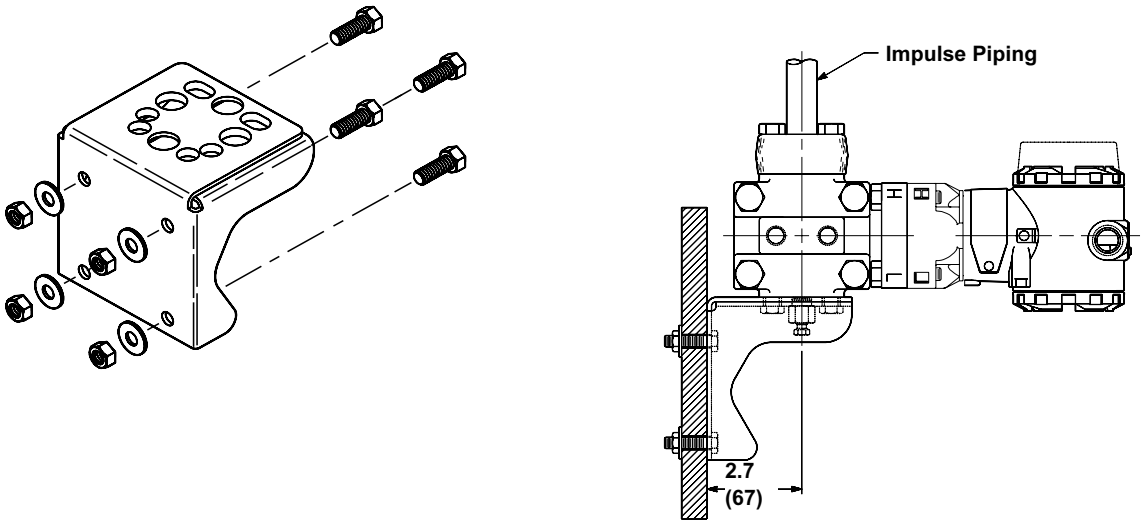

3051-3031G19A, F19B, 3051HB3A, HA3B

Dimensions are in inches (millimeters)

3051L Dimensional Drawings

2-in. Flange Configuring (Flush Mount Only)

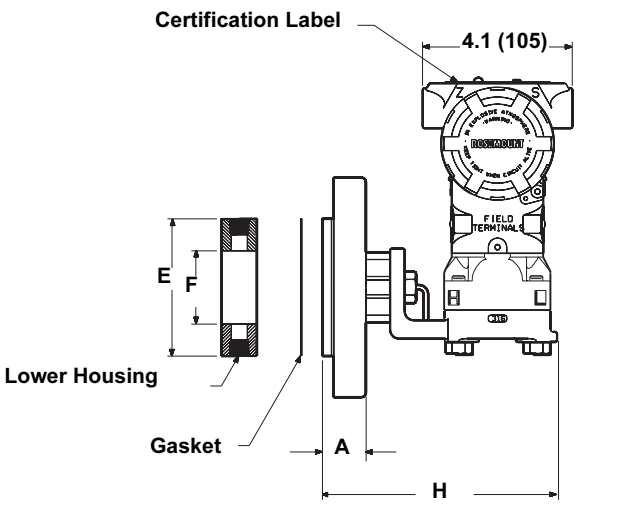

3- and 4-in. Flange Configuration

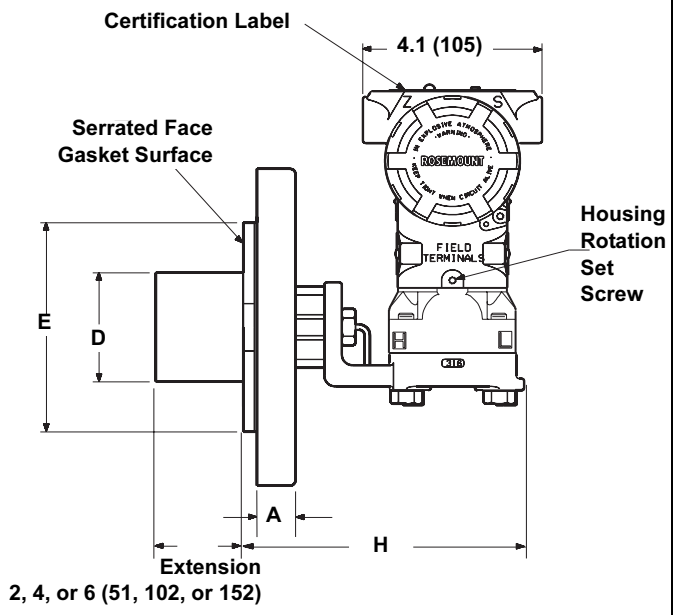

Optional Flushing Connection Ring (Lower Housing)

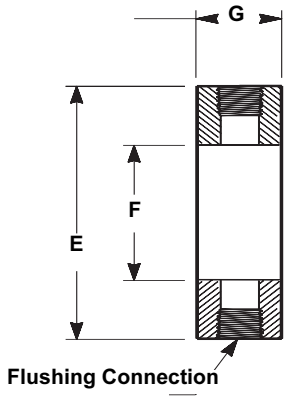

Diaphragm Assembly and Mounting Flange

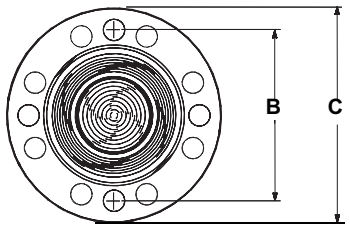

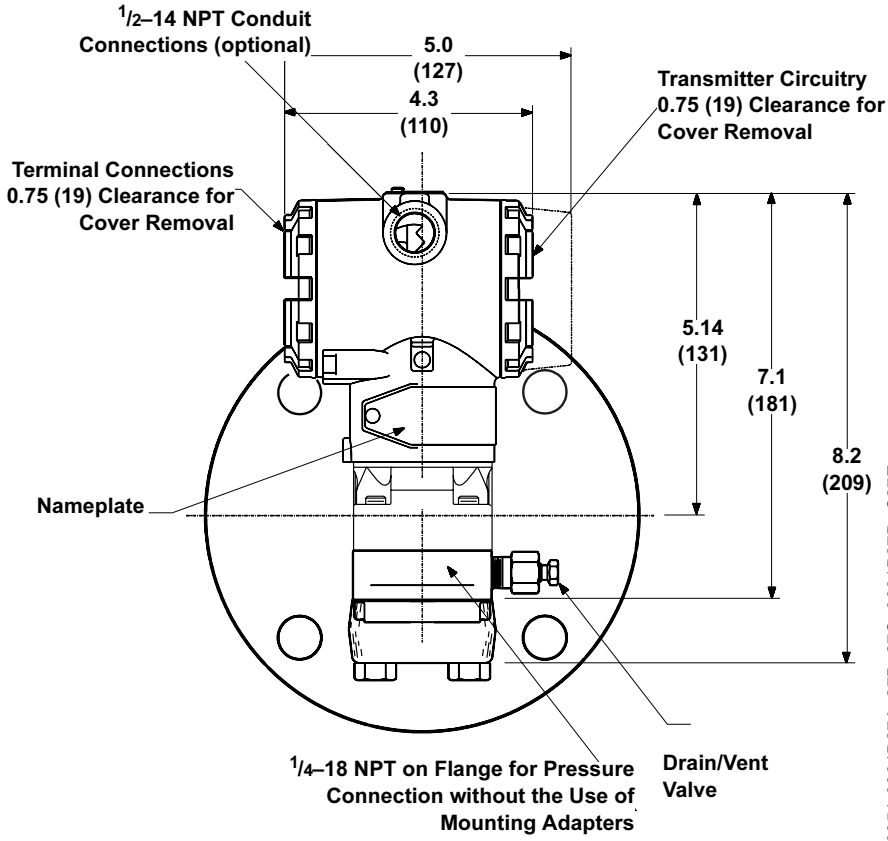

Dimensions are in inches (millimeters)

TABLE 10. 3051L Dimensional Specifications

Except where indicated, dimensions are in inches (millimeters).

Class	Pipe Size	Flange Thickness A	Bolt Circle Diameter B	Outside Diameter C	No. of Bolts	Bolt Hole Diameter	Extension Diameter(1) D	O.D. Gasket Surface E
ASME B16.5 (ANSI) 150	2 (51)	0.69 (18)	4.75 (121)	6.0 (152)	4	0.75 (19)	NA	3.6 (92)
	3 (76)	0.88 (22)	6.0 (152)	7.5 (191)	4	0.75 (19)	2.58 (66)	5.0 (127)
	4 (102)	0.88 (22)	7.5 (191)	9.0 (229)	8	0.75 (19)	3.5 (89)	6.2 (158)
ASME B16.5 (ANSI) 300	2 (51)	0.82 (21)	5.0 (127)	6.5 (165)	8	0.75 (19)	NA	3.6 (92)
	3 (76)	1.06 (27)	6.62 (168)	8.25 (210)	8	0.88 (22)	2.58 (66)	5.0 (127)
	4 (102)	1.19 (30)	7.88 (200)	10.0 (254)	8	0.88 (22)	3.5 (89)	6.2 (158)
ASME B16.5 (ANSI) 600	2 (51)	1.00 (25)	5.0 (127)	6.5 (165)	8	0.75 (19)	NA	3.6 (92)
	3 (76)	1.25 (32)	6.62 (168)	8.25 (210)	8	0.88 (22)	2.58 (66)	5.0 (127)
DIN 2501 PN 10–40	DN 50	20 mm	125 mm	165 mm	4	18 mm	NA	4.0 (102)
DIN 2501 PN 25/40	DN 80	24 mm	160 mm	200 mm	8	18 mm	65 mm	5.4 (138)
	DN 100	24 mm	190 mm	235 mm	8	22 mm	89 mm	6.2 (158)
DIN 2501 PN 10/16	DN 100	20 mm	180 mm	220 mm	8	18 mm	89 mm	6.2 (158)

Class	Pipe Size	Process Side F	Lower Housing G		H
			1/4 NPT	1/2 NPT	
ASME B16.5 (ANSI) 150	2 (51)	2.12 (54)	0.97 (25)	1.31 (33)	6.66 (169)
	3 (76)	3.6 (91)	0.97 (25)	1.31 (33)	6.66 (169)
	4 (102)	3.6 (91)	0.97 (25)	1.31 (33)	6.66 (169)
ASME B16.5 (ANSI) 300	2 (51)	2.12 (54)	0.97 (25)	1.31 (33)	6.66 (169)
	3 (76)	3.6 (91)	0.97 (25)	1.31 (33)	6.66 (169)
	4 (102)	3.6 (91)	0.97 (25)	1.31 (33)	6.66 (169)
ASME B16.5 (ANSI) 600	2 (51)	2.12 (54)	0.97 (25)	1.31 (33)	8.66 (219)
	3 (76)	3.6 (91)	0.97 (25)	1.31 (33)	8.66 (219)
DIN 2501 PN 10–40	DN 50	2.4 (61)	0.97 (25)	1.31 (33)	6.66 (169)
DIN 2501 PN 25/40	DN 80	3.6 (91)	0.97 (25)	1.31 (33)	6.66 (169)
	DN 100	3.6 (91)	0.97 (25)	1.31 (33)	6.66 (169)
DIN 2501 PN 10/16	DN 100	3.6 (91)	0.97 (25)	1.31 (33)	6.66 (169)

(1) Tolerances are 0.040 (1,02), –0.020 (0,51).

Ordering Information

TABLE 11. 3051C Differential, Gage, and Absolute Pressure Transmitters — = Not Applicable • = Applicable

Model	Transmitter Type (Select One)			CD	CG	CA
3051CD	Differential Pressure Transmitter			•	—	—
3051CG	Gage Pressure Transmitter			—	•	—
3051CA	Absolute Pressure Transmitter			—	—	•
	3051CD	**3051CG(1)**	**3051CA**	**CD**	**CG**	**CA**
0(2)	–3 to 3 inH_2O/0.1 inH_2O (–7,5 to 7,5 mbar/0,25 mbar)	Not Applicable	Not Applicable	•	—	•
1	–25 to 25 inH_2O/0.5 inH_2O (–62,2 to 62,2 mbar/1,2 mbar)	–25 to 25 inH_2O/0.5 inH_2O (–62,2 to 62,2 mbar/1,2 mbar)	0 to 30 psia/0.3 psia (0 to 2,1 bar/20,7 mbar)	•	•	•
2	–250 to 250 inH2O/2.5 inH_2O (–623 to 623 mbar/6,2 mbar)	–250 to 250 inH_2O/2.5 inH_2O (–623 to 623 mbar/6,2 mbar)	0 to 150 psia/1.5 psia (0 to 10,3 bar/0,1 bar)	•	•	•
3	–1000 to 1000 inH_2O/10 inH_2O (–2,5 to 2,5 bar/25 mbar)	–393 to 1000inH_2O/10in H_2O (–0,98 to 2,5 bar/25 mbar)	0 to 800 psia/8 psia (0 to 55,2 bar/0,55 bar)	•	•	•
4	–300 to 300 psi/3 psi (–20,7 to 20,7 bar/0,2 bar)	–14.2 to 300 psi/3 psi (–0,98 to 20,7 bar/0,2 bar)	0 to 4000 psia/40 psia (0 to 275,8 bar/2,8 bar)	•	•	•
5	–2000 to 2000 psi/20 psi (–137,9 to 137,9 bar/1,4 bar)	–14.2 to 2000 psig/20 psi (–0,98 to 137,9 bar/1,4 bar)	Not Applicable	•	•	—
Code	**Output**			**CD**	**CG**	**CA**
A	4–20 mA with Digital Signal Based on *HART* Protocol			•	•	•
M(3)	Low-Power, 1–5 V dc with Digital Signal Based on *HART* Protocol *(See Option C2 for 0.8–3.2 V dc)*			•	•	•
F	*FOUNDATION* fieldbus Protocol			•	•	•
W	Profibus — PA			•	•	•
Code	**Materials of Construction**			**CD**	**CG**	**CA**
	Process Flange Type	**Flange Material**	**Drain/Vent**			
2	*Coplanar*	SST	SST	•	•	•
3(4)	*Coplanar*	*Alloy C*	*Hastelloy* C276	•	•	•
4	*Coplanar*	*Monel*	*Monel*	•	•	•
5	*Coplanar*	Plated CS	SST	•	•	•
7(4)	*Coplanar*	SST	*Hastelloy* C276	•	•	•
8(4)	*Coplanar*	Plated CS	*Hastelloy* C276	•	•	•
0	Alternate Flange—See Options on page 26			•	•	•
Code	**Isolating Diaphragm**			**CD**	**CG**	**CA**
2(4)	316L SST			•	•	•
3(4)	*Hastelloy* C276			•	•	•
4	*Monel*			•	•	•
5	Tantalum *(Available on 3051CD and CG, Ranges 2–5 only. Not available on 3051CA)*			•	•	—
6	Gold-plated *Monel (Use in combination with O-ring Option Code B.)*			•	•	•
7	Gold-plated SST			•	•	•
Code	**O-ring**					
A	Glass-filled PTFE			•	•	•
B	Graphite-filled PTFE			•	•	•
Code	**Fill Fluid**			**CD**	**CG**	**CA**
1	Silicone			•	•	•
2	Inert fill (Halocarbon)			•	•	—

TABLE 11. 3051C Differential, Gage, and Absolute Pressure Transmitters — = Not Applicable • = Applicable

Code	Housing Material	Conduit Entry Size	CD	CG	CA
A	Polyurethane-covered Aluminum	½–14 NPT	•	•	•
B	Polyurethane-covered Aluminum	M20 × 1.5 (CM20)	•	•	•
C	Polyurethane-covered Aluminum	PG 13.5	•	•	•
D	Polyurethane-covered Aluminum	G½	•	•	•
J	SST	½–14 NPT	•	•	•
K	SST	M20 × 1.5 (CM20)	•	•	•
L	SST	PG 13.5	•	•	•
M	SST	G½	•	•	•
Code	***PlantWeb* Functionality**		**CD**	**CG**	**CA**
A01	Advanced Control Function Block Suite		•	•	•
D01	*FOUNDATION* fieldbus Diagnostics Suite		•	•	•
Code	**Alternate Flange Options (Requires Materials of Construction Code 0)**		**CD**	**CG**	**CA**
H2	Traditional Flange, 316 SST, SST Drain/Vent		•	•	•
H3(4)	Traditional Flange, *Alloy C*, *Hastelloy* C276 Drain/Vent		•	•	•
H4	Traditional Flange, *Monel*, *Monel* Drain/Vent		•	•	•
H7(4)	Traditional Flange, 316 SST, *Hastelloy* C276 Drain/Vent		•	•	•
HJ	DIN Compliant Traditional Flange, SST, 7/16 in. Adapter/Manifold Bolting		•	•	•
HK	DIN Compliant Traditional Flange, SST, 10 mm Adapter/Manifold Bolting		•	•	•
HL	DIN Compliant Traditional Flange, SST, 12mm Adapter/Manifold Bolting *(Not available on 3051CD0)*		•	•	•
FA	Level Flange, SST, 2 in., ANSI Class 150, Vertical Mount		•	•	•
FB	Level Flange, SST, 2 in., ANSI Class 300, Vertical Mount		•	•	•
FC	Level Flange, SST, 3 in., ANSI Class 150, Vertical Mount		•	•	•
FD	Level Flange, SST, 3 in., ANSI Class 300, Vertical Mount		•	•	•
FP	DIN Level Flange, SST, DN 50, PN 40, Vertical Mount		•	•	•
FQ	DIN Level Flange, SST, DN 80, PN 40, Vertical Mount		•	•	•
Code	**Integral Mount Manifold Options (Requires Materials of Construction Code 0)**		**CD**	**CG**	**CA**
S5	Assemble to Rosemount 305 Integral Manifold (specified separately, see the Rosemount 305 and 306 Integral Manifolds PDS (document number 00813-0100-4733))		•	•	•
Code	**Integral Mount Primary Elements (Optional)**		**CD**	**CG**	**CA**
S4	Factory Assembly to Rosemount Primary Element (Rosemount *Annubar* or Rosemount 1195 Integral Orifice) *(With the primary element installed, the maximum operating pressure will equal the lesser of either the transmitter or the primary element. Option is available for factory assembly to range 1–4 transmitters only)*		•	—	—
S3	Factory Assembly to Rosemount 405 Primary Element		•	—	—
Code	**Diaphragm Seal Assemblies (Optional)** ***NOTE: Standard flange and adapter bolts are austenitic 316 SST.***		**CD**	**CG**	**CA**
S1	One Diaphragm Seal (Direct Mount or Capillary Connection Type)		•	•	•
S2	Two Diaphragm Seals (Direct Mount or Capillary Connection Type)		•	—	—
Code	**Optional All Welded Diaphragm Seal Systems (for high vacuum applications)** ***NOTE: Standard flange and adapter bolts are austenitic 316 SST.***		**CD**	**CG**	**CA**
S7	One Diaphragm Seal, All-Welded System (Capillary Connection Type)		•	•	•
S8	Two Diaphragm Seals, All-Welded System (Capillary Connection Type)		•	—	—
S0	One Diaphragm Seal, All-Welded System (Direct Mount Connection Type)		•	•	•
S9	Two Diaphragm Seals, All-Welded System (One Direct Mount and One Capillary Connection Type)		•	—	—

TABLE 11. 3051C Differential, Gage, and Absolute Pressure Transmitters — = Not Applicable • = Applicable

Code	Mounting Bracket Options	CD	CG	CA
B4	*Coplanar* Flange Bracket for 2-in. Pipe or Panel Mounting, all SST	•	•	•
B1	Traditional Flange Bracket for 2-in. Pipe Mounting, CS Bolts	•	•	•
B2	Traditional Flange Bracket for Panel Mounting, CS Bolts	•	•	•
B3	Traditional Flange Flat Bracket for 2-in. Pipe Mounting, CS Bolts	•	•	•
B7	B1 Bracket with Series 300 SST Bolts	•	•	•
B8	B2 Bracket with Series 300 SST Bolts	•	•	•
B9	B3 Bracket with Series 300 SST Bolts	•	•	•
BA	SST B1 Bracket with Series 300 SST Bolts	•	•	•
BC	SST B3 Bracket with Series 300 SST Bolts	•	•	•
Code	**Hazardous Locations Certification Options**	**CD**	**CG**	**CA**
E5	FM Explosionproof Approval	•	•	•
I5	FM Non-incendive and Intrinsic Safety Approval	•	•	•
K5	FM Explosionproof and Intrinsic Safety Approval	•	•	•
I1(5)	ATEX Intrinsic Safety and Dust Certification	•	•	•
N1(5)	ATEX Type N and Dust Certification	•	•	•
E8	ATEX Flame-proof and Dust Certification	•	•	•
E4(5)	JIS Flame-proof Certification			
	JIS Intrinsic Safety Certification *(Only available with HART Option Code A)*			—
C5(6)	Measurement Canada Accuracy Approval *(Limited availability depending on transmitter type and range. Contact an Emerson Process Management representative)*			
C6	CSA Explosion-proof and Intrinsic Safety Approval	•	•	•
K6(5)	CSA and ATEX Explosion-proof and Intrinsic Safety Approval (combination of C6 and K8)	•	•	•
KB	FM and CSA Explosion-proof and Intrinsic Safety Approvals (combination of K5 and C6)	•	•	•
K7	SAA Flame-proof and Intrinsic Safety Approvals (combination of I7, N7, and E7)	•	•	•
K8(5)	ATEX Flame-proof and Intrinsic Safety Approvals (combination of I1 and E8)	•	•	•
KD(5)	FM, CSA, and ATEX Explosion-proof and Intrinsically Safe combination of K5, C6, I1, and E8	•	•	•
I7	SAA Intrinsic Safety Certification	•	•	•
E7	SAA Flame-proof Certification	•	•	•
N7	SAA Type N Certification	•	•	•
IA	ATEX Intrinsic Safety for FISCO; for *FOUNDATION* fieldbus protocol only	•	•	•
Code	**Bolting Options**	**CD**	**CG**	**CA**
L4	Austenitic 316 SST Bolts	•	•	•
L5	ASTM A 193, Grade B7M Bolts	•	•	•
L6	*Monel* Bolts	•	•	•
Code	**Meters (Optional)**	**CD**	**CG**	**CA**
M5	LCD display for Aluminum Housing (Housing Codes A, B, C, and D only)	•	•	•
M6	LCD display for SST Housing (Housing Codes J, K, L, and M only)	•	•	•

TABLE 11. 3051C Differential, Gage, and Absolute Pressure Transmitters — = Not Applicable • = Applicable

Code	Other Options	CD	CG	CA
Q4	Calibration Data Sheet	•	•	•
Q8	Material Traceability Certification per EN 10204 3.1.B *(Only available for the sensor module housing and Coplanar or traditional flanges and adapters (3051C), and for the sensor module housing and low-volume Coplanar flange and adapter (3051C with Option Code S1))*			
Q16	Surface finish certification for sanitary remote seals			
QP	Calibration certification and tamper evident seal			
QS	Certificate of FMEDA Data			
J1(6)(7)	Local Zero Adjustment Only			
J3(6)(7)	No Local Zero or Span Adjustment			
T1	Transient Protection Terminal Block			
C1(6)	Custom Software Configuration (Completed CDS 00806-0100-4001 required with order)	•	•	•
C2(6)	0.8–3.2 V dc Output with Digital Signal Based on *HART* Protocol (Output Code M only)			
C3	Gage Calibration (3051CA4 only)	—	—	•
C4(6)(8)	Analog Output Levels Compliant with NAMUR Recommendation NE 43			
CN(6)(8)	Analog Output Levels Compliant with NAMUR Recommendation NE 43 Alarm Configuration–Low			
P1	Hydrostatic Testing with Certificate	•	•	•
P2	Cleaning for Special Service	•	•	•
P3	Cleaning for <1 PPM Chlorine/Fluorine	•	•	•
P4	Calibrate at line pressure *(Specify Q48 on order for corresponding certificate)*	•	•	•
DF	1/2 -14 NPT flange adapter(s)— Material determined by flange material	•	•	•
D7	*Coplanar* Flange Without Drain/Vent Ports	•	•	•
D8	Ceramic Ball Drain/Vents	•	•	•
D9	JIS Process Connection—RC ¼ Flange with RC ½ Flange Adapter	•	•	•
P8	0.04% accuracy to 5:1 turndown (Range 2-4)	•	•	•
P9	4500 psig Static Pressure Limit (3051CD Ranges 2–5 only)	•	—	—
V5(9)	External Ground Screw Assembly	•	•	•
Typical Model Number:	**3051CD 2 A 2 2 A 1 A B4**			

(1) 3051CG lower range limit varies with atmospheric pressure.

(2) 3051CD0 is available only with Output Code A, Process Flange Code 0 (Alternate Flange H2, H7, HJ, or HK), Isolating Diaphragm Code 2, O-ring Code A, and Bolting Option L4.

(3) Not available with hazardous locations certification Options Codes I1, N1, E4, K6 and K8.

(4) Materials of Construction comply with recommendations per NACE MR0175/ISO 15156 for sour oil field production environments. Environmental limits apply to certain materials. Consult latest standard for details. Selected materials also conform to NACE MR0103 for sour refining environments.

(5) Not available with Low Power code M.

(6) Not available with Fieldbus (output code F) or Profibus (output code W).

(7) Local zero and span adjustments are standard unless Option Code J1 or J3 is specified

(8) NAMUR-Compliant operation is pre-set at the factory and cannot be changed to standard operation in the field.

(9) The V5 option is not needed with the T1 option; external ground screw assembly is included with the T1 option.

TABLE 12. 3051T Gage and Absolute Pressure Transmitter

Model	Transmitter Type	
3051T	Pressure Transmitter	
Code	**Pressure Type**	
G	Gage	
A	Absolute	
Code	**Pressure Ranges (Range/Min. Span)**	
	3051TG(1)	**3051TA**
1	–14.7 to 30 psi/0.3 psi (–1,01 to 2,1 bar/20,7 mbar)	0 to 30 psia/0.3 psia (0 to 2,1 bar/20,7 mbar)
2	–14.7 to 150 psi/1.5 psi (–1,01 to 10,3 bar/103,4 mbar)	0 to 150 psia/1.5 psia (0 to 10,3 bar/103,4 mbar)
3	–14.7 to 800 psi/8 psi (–1,01 to 55,2 bar/0,55 bar)	0 to 800 psia/8 psia (0 to 55,2 bar/0,55 bar)
4	–14.7 to 4000 psi/40 psi (–1,01 to 275,8 bar/2,8 bar)	0 to 4000 psia/40 psia (0 to 275,8 bar/2,8 bar)
5	–14.7 to 10000 psi/2000 psi (–1,01 to 689,5 bar/138 bar)	0 to 10000 psia/2000 psia (0 to 689,5 bar/138 bar)
Code	**Output**	
A	4–20 mA with Digital Signal Based on *HART* Protocol	
M	Low-Power 1–5 V dc with Digital Signal Based on *HART* Protocol (See Option Code C2 for 0.8–3.2 V dc Output) (*Not available with hazardous certification Option Codes I1, N1, E4, K6 or K8)*	
F	*FOUNDATION* fieldbus Protocol	
W	Profibus — PA	
Code	**Process Connection Style**	
2B	1/2–14 NPT Female	
2C	G½ A DIN 16288 Male (Available in SST for Range 1–4 only)	
2F	Coned and Threaded, Compatible with Autoclave Type F-250-C *(Only available in SST for Range 5)*	
Code	**Isolating Diaphragm**	**Process Connection Wetted Parts Material**
2(2)	316L SST	316L SST
3(2)	*Hastelloy* C276	*Hastelloy* C276
Code	**Fill Fluid**	
1	Silicone	
2	Inert (Fluorinert® FC-43)	
Code	**Housing Material**	**Conduit Entry Size**
A	Polyurethane-covered Aluminum	½–14 NPT
B	Polyurethane-covered Aluminum	M20 × 1.5 (CM20)
C	Polyurethane-covered Aluminum	PG 13.5
D	Polyurethane-covered Aluminum	G½
J	SST	½–14 NPT
K	SST	M20 × 1.5 (CM20)
L	SST	PG 13.5
M	SST	G½
Code	***PlantWeb* Functionality**	
A01	Advanced Control Function Block Suite	
D01	*FOUNDATION* fieldbus Diagnostics Suite	
Code	**Integral Mount Manifold (Optional)**	
S5	Assemble to Rosemount 306 Integral Manifold (specified separately, see the Rosemount 305 and 306 Integral Manifolds PDS (document number 00813-0100-4733)) (*Requires 1/2-in. process connection code 2B)*	
Code	**Remote Diaphragm Seals Assemblies (Optional)**	
S1	One remote diaphragm seal (Direct Mount or Capillary Connection Type) (Requires Process Connection Style code 2B)	
Code	**Mounting Brackets (Optional)**	
B4	Bracket for 2-in. Pipe or Panel Mounting, All SST	

TABLE 12. 3051T Gage and Absolute Pressure Transmitter

Code	Hazardous Locations Certifications (Optional)
E5	FM Explosion-proof Approval
I5	FM Non-incendive and Intrinsic Safety Approval
K5	FM Explosion-proof and Intrinsic Safety Approval
C5	Measurement Canada accuracy approval *(Limited availability depending on transmitter type and range. Contact an Emerson Process Management representative)*
C6	CSA Explosion-proof and Intrinsic Safety Approval
K6(3)	CSA and ATEX Explosion-proof and Intrinsic Safety Approval (combination of C6 and K8)
KB	FM and CSA Explosion-proof and Intrinsic Safety Approvals (combination of K5 and C6)
K7	SAA Flame-proof and Intrinsic Safety Approvals (combination of I7, N7, and E7)
K8(3)	ATEX Flame-proof and Intrinsic Safety Approvals (combination of I1 and E8)
KD(3)	CSA, FM, and ATEX Explosion-proof and Intrinsic Safety Approval (combination of K5, C6, I1, and E8)
I7	SAA Intrinsic Safety Certification
E4(3)	JIS Flame-proof Certification
E7	SAA Flame-proof Certification
N7	SAA Type N Certification
I1(3)	ATEX Intrinsic Safety and Dust Certification
N1(3)	ATEX Type N and Dust Certification
E8	ATEX Flame-proof and Dust Certification
DW	NSF drinking water approval
IA	ATEX Intrinsic Safety for FISCO; for *FOUNDATION* fieldbus protocol only
Code	**Other Options**
Q4	Calibration Data Sheet
Q8	Material Traceability Certification per EN 10204 3.1.B *NOTE: This option applies to the process connection only.*
Q16	Surface finish certification for sanitary remote seals
QP	Calibration certification and tamper evident seal
QS	Certificate of FMEDA Data
J1(4)(5)	Local Zero Adjustment Only
J3(4)(5)	No Local Zero or Span Adjustment
M5	LCD display for Aluminum Housing (Housing Codes A, B, C, and D only)
M6	LCD display for SST Housing (Housing Codes J, K, L and M only)
T1	Transient Protection Terminal Block
C1(4)	Custom Software Configuration (Completed CDS 00806-0100-4001 required with order)
C2(4)	0.8–3.2 V dc Output with Digital Signal Based on *HART* Protocol (Output Code M only)
C4(4)(6)	Analog Output Levels Compliant with NAMUR Recommendation NE 43, 27-June-1996.
CN(4)(6)	Analog Output Levels Compliant with NAMUR Recommendation NE 43: Low Alarm Configuration
P1	Hydrostatic Testing with Certificate
P2	Cleaning for Special Service
P3	Cleaning for <1 PPM Chlorine/Fluorine
P8	0.04% accuracy to 5:1 turndown (Range 1-4)
V5(7)	External Ground Screw Assembly

Typical Model Number: 3051T G 5 F 2A 2 1 A B4

(1) 3051TG lower range limit varies with atmospheric pressure.

(2) Materials of Construction comply with recommendations per NACE MR0175/ISO 15156 for sour oil field production environments. Environmental limits apply to certain materials. Consult latest standard for details. Selected materials also conform to NACE MR0103 for sour refining environments.

(3) Not available with low-power Option Code M.

(4) Not available with fieldbus (output code F) or Profibus protocols (output code W).

(5) Local zero and span adjustments are standard unless Option Code J1 or J3 is specified.

(6) NAMUR-Compliant operation is pre-set at the factory and cannot be changed to standard operation in the field.

(7) The V5 option is not needed with T1 option; external ground screw assembly is included with the T1 option.

TABLE 13. 3051L Flange-Mounted Liquid Level Transmitter

Model	Transmitter Type
3051L	Flange-Mounted Liquid Level Transmitter
Code	**Pressure Ranges (Range/Min. Span)**
2	–250 to 250 inH_2O/2.5 inH_2O (–0,6 to 0,6 bar/6,2 mbar)
3	–1000 to 1000 inH_2O/10 inH_2O (–2,5 to 2,5 bar/25 mbar)
4	–300 to 300 psi/3 psi (–20,7 to 20,7 bar/0,2 bar)
Code	**Output**
A	4–20 mA with Digital Signal Based on *HART* Protocol
M	Low-Power 1–5 V dc with Digital Signal Based on *HART* Protocol (See Option Code C2 for 0.8–3.2 V dc Output) *(Not available with hazardous certification Option Codes I1, N1, E4, K6, and K8)*
F	*FOUNDATION* fieldbus Protocol
W	Profibus – PA

High Pressure Side			
Code	**Diaphragm Size**	**Material**	**Extension Length**
G0	2 in./DN 50	316L SST	Flush Mount Only
H0	2 in./DN 50	*Hastelloy* C276	Flush Mount Only
J0	2 in./DN 50	Tantalum	Flush Mount Only
A0	3 in./DN 80	316L SST	Flush Mount
A2	3 in./DN 80	316L SST	2 in./50 mm
A4	3 in./DN 80	316L SST	4 in./100 mm
A6	3 in./DN 80	316L SST	6 in./150 mm
B0	4 in./DN 100	316L SST	Flush Mount
B2	4 in./DN 100	316L SST	2 in./50 mm
B4	4 in./DN 100	316L SST	4 in./100 mm
B6	4 in./DN 100	316L SST	6 in./150 mm
C0	3 in./DN 80	*Hastelloy* C276	Flush Mount
C2	3 in./DN 80	*Hastelloy* C276	2 in./50 mm
C4	3 in./DN 80	*Hastelloy* C276	4 in./100 mm
C6	3 in./DN 80	*Hastelloy* C276	6 in./150 mm
D0	4 in./DN 100	*Hastelloy* C276	Flush Mount
D2	4 in./DN 100	*Hastelloy* C276	2 in./50 mm
D4	4 in./DN 100	*Hastelloy* C276	4 in./100 mm
D6	4 in./DN 100	*Hastelloy* C276	6 in./150 mm
E0	3 in./DN 80	Tantalum	Flush Mount Only
F0	4 in./DN 100	Tantalum	Flush Mount Only

TABLE 13. 3051L Flange-Mounted Liquid Level Transmitter

Code	Mounting Flange		
	Size	**ASME B 16.5 (ANSI) or DIN Flange Rating**	**Material**
M	2 in.	Class 150	CS
A	3 in.	Class 150	CS
B	4 in.	Class 150	CS
N	2 in.	Class 300	CS
C	3 in.	Class 300	CS
D	4 in.	Class 300	CS
P	2 in.	Class 600	CS
E	3 in.	Class 600	CS
X	2 in.	Class 150	SST
F	3 in.	Class 150	SST
G	4 in.	Class 150	SST
Y	2 in.	Class 300	SST
H	3 in.	Class 300	SST
J	4 in.	Class 300	SST
Z	2 in.	Class 600	SST
L	3 in.	Class 600	SST
Q	DN 50	PN 10-40	CS
R	DN 80	PN 40	CS
S	DN 100	PN 40	CS
V	DN 100	PN 10/16	CS
K	DN 50	PN 10-40	SST
T	DN 80	PN 40	SST
U	DN 100	PN 40	SST
W	DN 100	PN 10/16	SST

Code	Process Fill-High Pressure Side	Temperature Limits
A	*Syltherm* XLT	–100 to 300 °F (–73 to 135 °C)
C	*D. C. Silicone 704*	60 to 400 °F (15 to 205 °C)
D	*D. C. Silicone 200*	–40 to 400 °F (–40 to 205 °C)
H	Inert (Halocarbon)	–50 to 350 °F (–45 to 177 °C)
G	Glycerine and Water	0 to 200 °F (–17 to 93 °C)
N	*Neobee M-20*	0 to 400 °F (–17 to 205 °C)
P	Propylene Glycol and Water	0 to 200 °F (–17 to 93 °C)

Low Pressure Side

Code	Configuration	Flange Adapter	Diaphragm Material	Sensor Fill Fluid
11	Gage	SST	316L SST	Silicone
21	Differential	SST	316L SST	Silicone
22	Differential	SST	*Hastelloy* C276	Silicone
2A	Differential	SST	316L SST	Inert (Halocarbon)
2B	Differential	SST	*Hastelloy* C276	Inert (Halocarbon)
31	Remote Seal	SST	316L SST	Silicone *(Requires Option Code S1)*

Code	O-ring Material
A	Glass-filled PTFE

TABLE 13. 3051L Flange-Mounted Liquid Level Transmitter

Code	Housing Material	Conduit Entry Size
A	Polyurethane-covered Aluminum	½–14 NPT
B	Polyurethane-covered Aluminum	M20 × 1.5 (CM20)
C	Polyurethane-covered Aluminum	PG 13.5
D	Polyurethane-covered Aluminum	G½
J	SST	½–14 NPT
K	SST	M20 × 1.5 (CM20)
L	SST	PG 13.5
M	SST	G½
Code	***PlantWeb* Functionality**	
A01	Advanced Control Function Block Suite	
D01	*FOUNDATION* fieldbus Diagnostics Suite	
Code	**Diaphragm Seal Assemblies (Optional)**	
S1	One Diaphragm Seal *(requires low pressure side Option Code 31 capillary connection type)*	
Code	**Hazardous Locations Certification Options**	
E5	FM Explosion-proof Approval	
I5	FM Non-incendive and Intrinsic Safety Approval	
K5	FM Explosion-proof and Intrinsic Safety Approval	
I1(1)	ATEX Intrinsic Safety and Dust Certification	
N1(1)	ATEX Type N and Dust Certification	
E8	ATEX Flame-proof and Dust Certification	
E4(1)	JIS Flame-proof Certification	
C6	CSA Explosion-proof and Intrinsic Safety Approval	
K6(1)	CSA and ATEX Explosion-proof and Intrinsic Safety Approval (combination of C6 and K8)	
KB	FM and CSA Explosion-proof and Intrinsic Safety Approvals (combination of K5 and C6)	
K7	SAA Flame-proof and Intrinsic Safety Approvals (combination of I7, N7, and E7)	
K8(1)	ATEX Flame-proof and Intrinsic Safety Approvals (combination of I1 and E8)	
KD(1)	CSA, FM, and ATEX Explosion-proof and Intrinsic Safety Approval (combination of K5, C6, I1, and E8)	
I7	SAA Intrinsic Safety Certification	
E7	SAA Flame-proof Certification	
N7	SAA Type N Certification	
IA	ATEX Intrinsic Safety for FISCO; for *FOUNDATION* fieldbus protocol only	
Code	**Bolt for Flange and Adapters (Optional)**	
L5	ASTM A 193, Grade B7M Bolts	
Code	**Meter Options**	
M5	LCD display for Aluminum Housing *(Available with Housing codes A, B, C, and D only)*	
M6	LCD display for SST Housing *(Available with Housing codes J, K, L, and M only)*	

TABLE 13. 3051L Flange-Mounted Liquid Level Transmitter

Code	Other Options
Q4	Calibration Data Sheet
Q8	Material Traceability Certification per EN 10204 3.1.B (*Available with the diaphragm, upper housing, Coplanar flange, adapter, sensor module housing, lower housing/flushing connection, and extension)*
QP	Calibration certification and tamper evident seal
J1(2)(3)	Local Zero Adjustment Only
J3(2)(3)	No Local Zero or Span Adjustment
T1	Transient Protection Terminal Block
C1(2)	Custom Software Configuration (*Completed CDS 00806-0100-4001 required with order)*
C2(2)	0.8–3.2 V dc Output with Digital Signal Based on *HART* Protocol *(Available with Output code M only)*
C4(2)(4)	Analog Output Levels Compliant with NAMUR Recommendation NE 43
CN(2)(4)	Analog Output Levels Compliant with NAMUR Recommendation NE 43: Alarm Configuration–Low
D8	Ceramic Ball Drain/Vents
V5(5)	External Ground Screw Assembly

Code	Lower Housing Flushing Connections					
	Ring Material	**Number**	**Size**	**2 in.**	**3 in.**	**4 in.**
F1	SST	1	1/4	•	•	•
F2	SST	2	1/4	•	•	•
F3(6)	*Hastelloy* C276	1	1/4	•	•	•
F4(6)	*Hastelloy* C276	2	1/4	•	•	•
F7	SST	1	1/2	•	•	•
F8	SST	2	1/2	•	•	•
F9	*Hastelloy* C276	1	1/2	•	•	•
F0	*Hastelloy* C276	2	1/2	•	•	•

Typical Model Number:

(1) Not available with low-power Option Code M

(2) Not available with fieldbus (output code F) or profibus protocols (output code W).

(3) Local zero and span adjustments are standard unless Option Code J1 or J3 is specified.

(4) NAMUR-Compliant operation is pre-set at the factory and cannot be changed to standard operation in the field.

(5) The V5 option is not needed with the T1 option; external ground screw assembly is included with the T1 option.

(6) Not available with Option Codes A0, B0, and G0.

TABLE 14. 3051H Pressure Transmitter for High-Temperature Processes — = Not Applicable • = Applicable

Model	Transmitter Type (Select One)	HD	HG
3051HD	Differential Pressure Transmitter for High-Temperature Processes	•	—
3051HG	Gage Pressure Transmitter for High-Temperature Processes	—	•

Code	3051HD	3051HG
2	–250 to 250 inH_2O/2.5 inH_2O (–0,62 to 0,62 bar/6,2 mbar)	–250 to 250 inH_2O/2.5 inH_2O (–0,62 to 0,62 bar/6,2 mbar)
3	–1000 to 1000 inH_2O/10 inH_2O (–2,5 to 2,5 bar/25 mbar)	–407 to 1000 inH_2O/10in H_2O (–1,01 to 2,5 bar/25 mbar)
4	–300 to 300 inH_2O/3 psi (–747 to 747 mbar/0,2 bar)	–14.7 to 300 psi/3 psi (–1,01 to 20,7 bar/0,2 bar)
5	–2000 to 2000 psi/20 psi (–138 to 138 bar/1,4 bar)	–14.7 to 2000 psig/20 psi (–1,01 to 138 bar/1,4 bar)

NOTE: 3051HG lower range limit varies with atmospheric pressure.

Code	Output	HD	HG
A	4–20 mA with Digital Signal Based on *HART* Protocol	•	•
M	Low-Power 1–5 V dc with Digital Signal Based on *HART* Protocol (See Option Code C2 for 0.8–3.2 V dc Output) *(Not available with hazardous certification Option Codes I1, N1, E4, K6, and K8)*	•	•
F	*FOUNDATION* fieldbus Protocol	•	•
W	Profibus – PA	•	•

Code	Process Connection		HD	HG
	Process Flange Material	**Drain/Vent**		
2	SST	SST	•	•
7(1)	SST	*Hastelloy* C276	•	•

Code	Process Isolating Diaphragm	HD	HG
2	316L SST	•	•
3(1)	*Hastelloy* C276	•	•
5	Tantalum	•	•

Code	O-ring Material	HD	HG
A	Glass-Filled PTFE	•	•

Code	Process Fill Fluid	HD	HG
D	*D.C. 200* Silicone	•	•
H	Inert	•	•
N	*Neobee M-20*	•	•

Code	Sensor Module Isolator Material	HD	HG
2	SST	•	•

Code	Sensor Module Fill Fluid	HD	HG
1	Silicone	•	•
2	Inert (Halocarbon)	•	•

Code	Housing Material	Conduit Entry Size	HD	HG
A	Polyurethane-covered Aluminum	½–14 NPT	•	•
B	Polyurethane-covered Aluminum	M20 × 1.5 (CM20)	•	•
C	Polyurethane-covered Aluminum	PG 13.5	•	•
D	Polyurethane-covered Aluminum	G½	•	•
J	SST	½–14 NPT	•	•
K	SST	M20 × 1.5 (CM20)	•	•
L	SST	PG 13.5	•	•
M	SST	G½	•	•

Code	*PlantWeb* Functionality
A01	Advanced Control Function Block Suite
D01	*FOUNDATION* fieldbus Diagnostics Suite

Code	Integral Mount Primary Elements (Optional)	HD	HG
S4	Factory Assembly to Rosemount Primary Element (Rosemount *Annubar* or Rosemount 1195 Integral Orifice) *(With the primary element installed, the maximum operating pressure will equal the lesser of either the transmitter or the primary element. Option is available for factory assembly to range 1–4 transmitters only)*	•	—

TABLE 14. 3051H Pressure Transmitter for High-Temperature Processes — = Not Applicable • = Applicable

Code	Mounting Bracket Options	HD	HG
B5	Universal Mounting Bracket for 2-in. Pipe or Panel Mount, CS Bolts	•	•
B6	Universal Mounting Bracket for 2-in. Pipe or Panel Mount, SST Bolts	•	•
Code	**Hazardous Locations Certification Options**	**HD**	**HG**
E5	FM Explosion-proof Approval	•	•
I5	FM Non-incendive and Intrinsic Safety Approval	•	•
K5	FM Explosion-proof and Intrinsic Safety Approval	•	•
I1(2)	ATEX Intrinsic Safety and Dust Certification	•	•
N1(2)	ATEX Type N and Dust Certification	•	•
E8	ATEX Flame-proof and Dust Certification	•	•
E4(2)	JIS Flame-proof Certification	•	•
C6	CSA Explosion-proof and Intrinsic Safety Approval	•	•
K6(2)	CSA and ATEX Explosion-proof and Intrinsic Safety Approval (combination of C6 and K8)	•	•
KB	FM and CSA Explosion-proof and Intrinsic Safety Approvals (combination of K5 and C6)	•	•
K7	SAA Flame-proof and Intrinsic Safety Approvals (combination of I7, N7, and E7)	•	•
KB(2)	ATEX Flame-proof and Intrinsic Safety Approvals (combination of I1 and E8)	•	•
KD(2)	CSA, FM, and ATEX Explosion-proof and Intrinsic Safety Approval (combination of K5, C6, I1, and E8)	•	•
I7	SAA Intrinsic Safety Certification	•	•
E7	SAA Flame-proof Certification	•	•
N7	SAA Type N Certification	•	•
IA	ATEX Intrinsic Safety for FISCO; for *FOUNDATION* fieldbus protocol only	•	•
IE	FM FISCO Intrinsic Safety; for *FOUNDATION* fieldbus protocol only	•	•
Code	**Bolt for Flange and Adapter Options**	**HD**	**HG**
L4	Austenitic 316 SST Bolts	•	•
Code	**Meter Options**	**HD**	**HG**
M5	LCD display for Aluminum Housing *(Available with Housing codes A, B, C, and D only)*	•	•
M6	LCD display for SST Housing *(Available with Housing codes J, K, L, and M only)*	•	•
Code	**Other Options**	**HD**	**HG**
Q4	Calibration Data Sheet	•	•
Q8	Material traceability certification per EN 10204 3.1.B	•	•
QP	Calibration certification and tamper evident seal	•	•
J1(3)	Local Zero Adjustment Only *(Local zero and span adjustments are standard unless Option Code J1 or J3 is specified.)*	•	•
J3(3)	No Local Zero or Span Adjustment *(Local zero and span adjustments are standard unless Option Code J1 or J3 is specified)*	•	•
T1	Transient Protection Terminal Block	•	•
C1(3)	Custom Software Configuration (Completed CDS 00806-0100-4001 required with order)	•	•
C2(3)	0.8–3.2 V dc Output with Digital Signal Based on *HART* Protocol *(Output Code M only)*	•	•
C4(3)(4)	Analog Output Levels Compliant with NAMUR Recommendation NE 43	•	•
CN(3)(4)	Analog Output Levels Compliant with NAMUR Recommendation NE 43: Alarm Configuration–Low	•	•
P1	Hydrostatic Testing with Certificate	•	•
P2	Cleaning for Special Service	•	•
P3	Cleaning for <1 PPM Chlorine/Fluorine	•	•
DF	1/2–14 NPT flange adapters—SST	•	•
D8	Ceramic Ball Drain/Vents	•	•
V5(5)	External Ground Screw Assembly	•	•
Typical Model Number: 3051HG 2 A 2 2 A H 2 1 A B5			

(1) Materials of Construction comply with recommendations per NACE MR0175/ISO 15156 for sour oil field production environments. Environmental limits apply to certain materials. Consult latest standard for details. Selected materials also conform to NACE MR0103 for sour refining environments.

(2) Not available with low-power Option Code M.

(3) Not available with fieldbus (output code F) or profibus protocols (output code W).

(4) NAMUR-Compliant operation is pre-set at the factory and cannot be changed to standard operation in the field.

(5) The V5 option is not needed with the T1 option; external ground screw assembly is included with the T1 option.

OPTIONS

Standard Configuration

Unless otherwise specified, transmitter is shipped as follows:

ENGINEERING UNITS	
***Differential/Gage*:**	inH_2O (Range 0, 1, 2, and 3) psi (Range 4 and 5)
***Absolute/3051T*:**	psi (all ranges)
4 mA (1 V dc)(1):	0 (engineering units above)
20 mA (5 V dc):	Upper range limit
Output:	Linear
Flange type:	Specified model code option
Flange material:	Specified model code option
O-ring material:	Specified model code option
Drain/vent:	Specified model code option
Integral meter:	Installed or none
Alarm(1):	Upscale
Software tag:	(Blank)

(1) Not applicable to fieldbus.

Custom Configuration *HART* protocol only(1)

If Option Code C1 is ordered, the customer may specify the following data in addition to the standard configuration parameters.

- Output Information
- Transmitter Information
- LCD display Configuration
- Hardware Selectable Information
- Signal Selection

Refer to the “HART Protocol C1 Option Configuration Data Sheet” on page 39.

Tagging (3 options available)

- Standard SST hardware tag is wired to the transmitter. Tag character height is 0.125 in. (3,18 mm), 56 characters maximum.
- Tag may be permanently stamped on transmitter nameplate upon request, 56 characters maximum.
- Tag may be stored in transmitter memory (30 characters maximum). Software tag is left blank unless specified.

Commissioning tag (fieldbus only)

A temporary commissioning tag is attached to all transmitters. The tag indicates the device ID and allows an area for writing the location.

Optional Rosemount 305 or 306 Integral Manifolds

Factory assembled to 3051C and 3051T transmitters. Refer to the following Product Data Sheet (document number 00813-0100-4733) for additional information.

Optional Three-Valve Manifolds (Packaged Separately)

- Part No.1151-0150-0001: 3-Valve Manifold, Carbon Steel
- Part No. 1151-0150-0002: 3-Valve Manifold, 316 SST

(1) Not applicable to fieldbus.

Optional Diaphragm and Sanitary Seals

Refer to Product Data Sheet 00813-0100-4016 or 00813-0201-4016. for additional information.

Output Information(1)

Output range points must be the same unit of measure. Available units of measure include:

inH2O	inH2O@4 °C(1)	psi	Pa
inHg	ftH2O	bar	kPa
mmH2O	mmH2O@4 °C(1)	mbar	torr
mmHg	g/cm2	kg/cm2	atm

(1) Not available on low power or previous versions.

LCD display

M5 Digital Meter, 5-Digit, 2-Line LCD

- Direct reading of digital data for higher accuracy
- Displays user-defined flow, level, volume, or pressure units
- Displays diagnostic messages for local troubleshooting
- 90-degree rotation capability for easy viewing

M6 Digital Meter with 316 Stainless Steel Cover

- For use with stainless steel housing option (housing codes J, K, and L)

Local Span and Zero Adjustment(2)

Transmitters ship with local span and zero adjustments standard unless otherwise specified.

- Non-interactive external zero and span adjustments ease calibration
- Magnetic switches replace standard potentiometer adjustments to optimize performance

J1 Local Zero Adjustment Only(1)

J3 No Local Zero or Span Adjustment(1)

Transient Protection

T1 Integral Transient Protection Terminal Block

- Integral transient protection terminal block
- Meets IEEE Standard 587, Category B
  1 kV crest (10 × 1 000 microseconds)
  3 kV crest (8 × 20 microseconds)
  6 kV crest (1.2 × 50 microseconds)
- Meets IEEE Standard 472,
  Surge Withstand Capability
  SWC 2,5 kV crest, 1 MHz wave form
- Applicable standards: IEC 801-4, 801-5

Bolts for Flanges and Adapters

- Options permit bolts for flanges and adapters to be obtained in various materials
- Standard material is plated carbon steel per ASTM A449, Type 1

L4 Austenitic 316 Stainless Steel Bolts

L5 ASTM A 193, Grade B7M Bolts

L6 *Monel* Bolts

(2) Not applicable to fieldbus.

Rosemount 3051C *Coplanar* Flange and 3051T Bracket Option

B4 Bracket for 2-in. Pipe or Panel Mounting

- For use with the standard *Coplanar* flange configuration
- Bracket for mounting of transmitter on 2-in. pipe or panel
- Stainless steel construction with stainless steel bolts

Rosemount 3051H Bracket Options

B5 Bracket for 2-in. Pipe or Panel Mounting

- For use with the 3051H Pressure Transmitter for high process temperatures
- Carbon steel construction with carbon steel bolts

B6 B5 Bracket with SST Bolts

- Same bracket as the B5 option with Series 300 stainless steel bolts.

Traditional Flange Bracket Options

B1 Bracket for 2-in. Pipe Mounting

- For use with the traditional flange option
- Bracket for mounting on 2-in. pipe
- Carbon steel construction with carbon steel bolts
- Coated with polyurethane paint

B2 Bracket for Panel Mounting

- For use with the traditional flange option
- Bracket for mounting transmitter on wall or panel
- Carbon steel construction with carbon steel bolts
- Coated with polyurethane paint

B3 Flat Bracket for 2-in. Pipe Mounting

- For use with the traditional flange option
- Bracket for vertical mounting of transmitter on 2-in. pipe
- Carbon steel construction with carbon steel bolts
- Coated with polyurethane paint

B7 B1 Bracket with SST Bolts

- Same bracket as the B1 option with Series 300 stainless steel bolts

B8 B2 Bracket with SST Bolts

- Same bracket as the B2 option with Series 300 stainless steel bolts

B9 B3 Bracket with SST Bolts

- Same bracket as the B3 option with Series 300 stainless steel bolts

BA Stainless Steel B1 Bracket with SST Bolts

- B1 bracket in stainless steel with Series 300 stainless steel bolts

BC Stainless Steel B3 Bracket with SST Bolts

- B3 bracket in stainless steel with Series 300 stainless steel bolts

Shipping Weights

TABLE 15. Transmitter Weights without Options

Transmitter	Add Weight In lb (kg)
3051C	6.0 (2,7)
3051L	Table 16 on page 38
3051H	13.6 (6,2)
3051T	3.0 (1,4)

TABLE 16. 3051L Weights without Options

Flange	Flush lb. (kg)	2-in. Ext. lb (kg)	4-in. Ext. lb (kg)	6-in. Ext. lb (kg)
2-in., 150	12.5 (5,7)	—	—	—
3-in., 150	17.5 (7,9)	19.5 (8,8)	20.5 (9,3)	21.5 (9,7)
4-in., 150	23.5 (10,7)	26.5 (12,0)	28.5 (12,9)	30.5 (13,8)
2-in., 300	17.5 (7,9)	—	—	—
3-in., 300	22.5 (10,2)	24.5 (11,1)	25.5 (11,6)	26.5 (12,0)
4-in., 300	32.5 (14,7)	35.5 (16,1)	37.5 (17,0)	39.5 (17,9)
2-in., 600	15.3 (6,9)	—	—	—
3-in., 600	25.2 (11,4)	27.2 (12,3)	28.2 (12,8)	29.2 (13,2)
DN 50/PN 40	13.8 (6,2)	—	—	—
DN 80/PN 40	19.5 (8,8)	21.5 (9,7)	22.5 (10,2)	23.5 (10,6)
DN 100/ PN 10/16	17.8 (8,1)	19.8 (9,0)	20.8 (9,5)	21.8 (9,9)
DN 100/ PN 40	23.2 (10,5)	25.2 (11,5)	26.2 (11,9)	27.2 (12,3)

TABLE 17. Transmitter Options Weights

Code	Option	Add lb (kg)
J, K, L, M	Stainless Steel Housing(T)	3.9 (1,8)
J, K, L, M	Stainless Steel Housing (C, L, H, P)	3.1 (1,4)
M5	LCD display for Aluminum Housing	0.5 (0,2)
M6	LCD display for SST Housing	1.25 (0,6)
B4	SST Mounting Bracket for *Coplanar* Flange	1.0 (0,5)
B1 B2 B3	Mounting Bracket for Traditional Flange	2.3 (1,0)
B7 B8 B9	Mounting Bracket for Traditional Flange	2.3 (1,0)
BA, BC	SST Bracket for Traditional Flange	2.3 (1,0)
B5 B6	Mounting Bracket for 3051H	2.9 (1,3)
H2	Traditional Flange	2.4 (1,1)
H3	Traditional Flange	2.7 (1,2)
H4	Traditional Flange	2.6 (1,2)
H7	Traditional Flange	2.5 (1,1)
FC	Level Flange—3 in., 150	10.8 (4,9)
FD	Level Flange—3 in., 300	14.3 (6,5)
FA	Level Flange—2 in., 150	10.7 (4,8)
FB	Level Flange—2 in., 300	14.0 (6,3)
FP	DIN Level Flange, SST, DN 50, PN 40	8.3 (3,8)
FQ	DIN Level Flange, SST, DN 80, PN 40	13.7 (6,2)

HART Protocol C1 Option Configuration Data Sheet

★ = Default Value(1)

CONFIGURATION DATA SHEET

Customer: _____ P.O. No.: _____

Model No.: _____ Line Item: _____

SST Tag No.: _____

Software Tag: |__|__|__|__|__|__|__|__|

OUTPUT INFORMATION: (Software Selectable)

4 mA (1, 0.8 Volts) = _____ 0 ★

20 mA (5, 3.2 Volts) = _____ Upper Range Limit ★

Pressure Units =
- ☐ inH_2O(2)
- ☐ psi (3) ★
- ☐ Pa
- ☐ ftH_2O
- ☐ inHg
- ☐ bar
- ☐ kPa
- ☐ g/cm^2
- ☐ mbar
- ☐ Torr
- ☐ mmH_2O
- ☐ inH_2O at 4 °C(5)
- ☐ Atm
- ☐ kg/cm^2
- ☐ mmHg
- ☐ mmH_2O at 4 °C (5)

Output =
- ☐ Linear ★
- ☐ Square Root (For DP transmitters only)

Damping(4)=
- ☐ 0.00 sec.
- ☐ 0.05 sec.
- ☐ 0.10 sec.
- ☐ 0.20 sec.
- ☐ 0.40 sec.★
- ☐ 0.80 sec.
- ☐ 1.60 sec.
- ☐ 3.20 sec.
- ☐ 12.8 sec.
- ☐ 25.6 sec.

TRANSMITTER INFORMATION: (Software Selectable)

Descriptor(4): |__|__|__|__|__|__|__|__|__|__|__|__|__|__|__|__|(16 characters)

Message(4): |__|__|__|__|__|__|__|__|__|__|__|__|__|__|__|__|__|__|__|__|__|__|__|__|__|__|__|__|__|__|__|__|
(32 characters)

Date(4): ☐ ☐/☐ ☐ ☐/☐ ☐
Day Month Year

Local Span and Zero: ☐ Enabled ★ ☐ Disabled

(1) Default values may be different outside the U.S. A. Consult an Emerson Process Management Representative for details.

(2) inH20 for CD/CG ranges 1-3

(3) psi for CD/CG range 4 and 5, all CA ranges

(4) C1 option required for configuration of this parameter.

(5) Not available with low power output.

LCD display CONFIGURATION (Software Adjustable – M5 or M6 option must be specified in model number)

Meter Display Type[4]:

Eng. Units only — Alternate Eng. Units &% of Range

% of Range only — Alternate Eng. Units & Custom Display[5]

Custom Display only — ☐ Alternate % of Range & Custom Display[5]

Custom Display Configuration: (must be filled out if Custom Display is selected as meter type)

Decimal Point Position (fixed)— indicate decimal point location: X□ X□ X* X X

Enter Lower Range Value (Decimal point must be in the same position as specified above.)

(circle sign) + – ☐□☐ □☐ □☐□☐□ +000.00

Enter Upper Range Value (Decimal point must be in the same position as specified above.)

(circle sign) + – ☐□☐ □☐□☐□☐ □ +100.00

Custom Units—spaces consume A-Z, 0-9, /, *, %, blank

☐ ☐ ☐ ☐ ☐ %RNGE

Custom Display Transfer Function (Independent of Analog Output)

☐ Linear ☐ Square Root

HARDWARE SELECTABLE INFORMATION

Alarm Option:	☐ High	Low
Transmitter Security:	Off	On

Note: Specify C4 Option in model structure when ordering NAMUR-compliant alarm and saturation limits.[5]

SIGNAL SELECTION: (Software Selectable)

4–20 mA with simultaneous digital signal based on *HART* protocol

Burst mode of *HART* digital process variable [4]

Burst mode output options:

Primary variable in engineering units

Primary variable in percent of range

All dynamic variables in engineering units and the primary variable mA value

Multidrop Communication[4][6] — Choose transmitter address[7] (1-15): _____

(4) C1 option required for configuration of this parameter.
(5) Not available with low power output.
(6) This option fixes the transmitter analog output at 4mA.
(7) Default address is 1 if multidrop communication is selected.

3051C Differential/Gage Pressure Transmitter Range Limits										
	Range 1 Span		Range 2 Span		Range 3 Span		Range 4 Span		Range 5 Span	
Units	min	max	min	max	min	max	min	max	min	max
inH_2O	0.5	25	2.5	250	10	1000	83.040	8304	553.60	55360
inHg	0.03678	1.8389	0.18389	18.389	0.73559	73.559	6.1081	610.81	40.720	4072.04
ftH_2O	0.04167	2.08333	0.20833	20.8333	0.83333	83.3333	6.9198	691.997	46.13	4613.31
mmH_2O	12.7	635.5	63.553	6355	254	25421	2110.95	211095	14073	1407301
mmHg	0.93416	46.7082	4.67082	467.082	18.6833	1868.33	155.145	15514.5	1034.3	103430
psi	0.01806	0.903	0.0902	9.03183	0.36127	36.127	3	300	20	2000
bar	0.00125	0.06227	0.00623	0.62272	0.02491	2.491	0.20684	20.6843	1.37895	137.895
mbar	1.2454	62.2723	6.22723	622.723	24.9089	2490.89	206.843	20684.3	1378.95	137895
g/cm^2	1.26775	63.3875	6.33875	633.875	25.355	2535.45	210.547	21054.7	1406.14	140614
kg/cm^2	0.00127	0.0635	0.00635	0.635	0.0254	2.54	0.21092	21.0921	1.40614	140.614
Pa	124.545	6227.23	622.723	62160.6	2490.89	249089	20684.3	2068430	137895	13789500
kPa	0.12545	6.2272	0.62272	62.2723	2.49089	249.089	20.6843	2068.43	137.895	13789.5
torr	0.93416	46.7082	4.67082	467.082	18.6833	1868.33	155.145	15514.5	1034.3	103430
atm	0.00123	0.06146	0.00615	0.61460	0.02458	2.458	0.20414	20.4138	1.36092	136.092

When using a HART communicator, ±5% adjustment is allowed on the sensor limit to allow for unit conversions.

3051L/3051H Pressure Transmitter Range Limits								
	Range 2 Span		Range 3 Span		Range 4 Span		Range 5 Span	
Units	min	max	min	max	min	max	min	max
inH_2O	2.5	250	10	1000	83.040	8304	553.60	55360
inHg	0.18389	18.389	0.73559	73.559	6.1081	610.81	40.720	4072.04
ftH_2O	0.20833	20.8333	0.83333	83.3333	6.9198	691.997	46.13	4613.31
mmH_2O	63.553	6355	254	25421	2110.95	211095	14073	1407301
mmHg	4.67082	467.082	18.6833	1868.33	155.145	15514.5	1034.3	103430
psi	0.0902	9.03183	0.36127	36.127	3	300	20	2000
bar	0.00623	0.62272	0.02491	2.491	0.20684	20.6843	1.37895	137.895
mbar	6.22723	622.723	24.9089	2490.89	206.843	20684.3	1378.95	137895
g/cm^2	6.33875	633.875	25.355	2535.45	210.547	21054.7	1406.14	140614
kg/cm^2	0.00635	0.635	0.0254	2.54	0.21092	21.0921	1.40614	140.614
Pa	622.723	62160.6	2490.89	249089	20684.3	2068430	137895	13789500
kPa	0.62272	62.2723	2.49089	249.089	20.6843	2068.43	137.895	13789.5
torr	4.67082	467.082	18.6833	1868.33	155.145	15514.5	1034.3	103430
atm	0.00615	0.61460	0.02458	2.458	0.20414	20.4138	1.36092	136.092

When using a HART communicator, ±5% adjustment is allowed on the sensor limit to allow for unit conversions.

3051T Gage and Absolute Pressure Transmitter Range Limits										
	Range 1 Span		Range 2 Span		Range 3 Span		Range 4 Span		Range 5 Span	
Units	min	max	min	max	min	max	min	max	min	max
inH_2O	8.30397	831.889	41.5198	4159.45	221.439	22143.9	1107.2	110720	55360	276799
inHg	0.61081	61.0807	3.05403	305.403	16.2882	1628.82	81.441	8144.098	4072.04	20360.2
ftH_2O	0.69199	69.3241	3.45998	345.998	18.4533	1845.33	92.2663	9226.63	4613.31	23066.6
mmH_2O	211.10	21130	1054.60	105460.3	5634.66	563466	28146.1	2814613	1407301	7036507
mmHg	15.5145	1551.45	77.5723	7757.23	413.72	41372	2068.6	206860.0	103430	517151
psi	0.3	30	1.5	150	8	800	40	4000	2000	10000
bar	0.02068	3.06843	0.10342	10.3421	0.55158	55.1581	2.75791	275.7905	137.895	689.476
mbar	20.6843	2068.43	103.421	10342.11	551.581	55158.1	2757.91	275790.5	137895	689476
g/cm^2	21.0921	2109.21	105.461	10546.1	561.459	56145.9	2807.31	280730.6	140614	703067
kg/cm^2	0.02109	2.10921	0.10546	10.5461	0.56246	56.2456	2.81228	281.228	140.614	701.82
Pa	2068.43	206843	10342.1	1034212	55158.1	5515811	275791	27579054	13789500	68947600
kPa	2.06843	206.843	10.3421	1034.21	55.1581	5515.81	275.791	27579.05	13789.5	68947.6
torr	15.5145	1551.45	77.5726	7757.26	413.721	413721	2068.6	206859.7	103430	517151
atm	0.02041	2.04138	0.10207	10.2069	0.54437	54.4368	2.72184	272.1841	136.092	680.46

When using a HART communicator, ±5% adjustment is allowed on the sensor limit to allow for unit conversions.

3051C Absolute Pressure Transmitter Range Limits								
	Range 1 Span		Range 2 Span		Range 3 Span		Range 4 Span	
Units	min	max	min	max	min	max	min	max
inH_2O	8.30397	831.889	41.5198	4151.98	221.439	22143.9	1107.2	110720
inHg	0.61081	61.0807	3.05403	305.403	16.2882	1628.82	81.441	8144.098
ftH_2O	0.69199	69.3241	3.45998	345.998	18.4533	1845.33	92.2663	9226.63
mmH_2O	211.10	21130	6.35308	635.308	5634.66	563466	28146.1	2814613
mmHg	15.5145	1551.45	1055.47	105547	413.72	41372	2068.6	206860.0
psi	0.3	30	1.5	150	8	800	40	4000
bar	0.02068	2.06843	0.10342	10.342	0.55158	55.1581	2.75791	275.7905
mbar	20.6843	2068.43	103.421	10342.1	551.581	55158.1	2757.91	275790.5
g/cm^2	21.0921	2109.21	105.27	105.27	561.459	56145.9	2807.31	280730.6
kg/cm^2	0.02109	2.10921	0.10546	10.546	0.56246	56.2456	2.81228	281.228
Pa	2068.43	206843	10342.1	1034210	55158.1	5515811	275791	27579054
kPa	2.06843	206.843	10.3421	1034.21	55.1581	5515.81	275.791	27579.05
torr	15.5145	1551.45	77.5726	7757.26	413.721	413721	2068.6	206859.7
atm	0.02041	2.04138	0.10207	10.207	0.54437	54.4368	2.72184	272.1841

When using a HART communicator, ±5% adjustment is allowed on the sensor limit to allow for unit conversions.

Rosemount Model 3051 Smart Pressure Transmitters may be protected by one or more of the following U.S. Patent Nos. 4,370,890; 4,466,290; 4,612,812; 4,791,352; 4,798,089; 4,818,994; 4,833,922; 4,866,435; 4,926,340; 4,988,990; and 5,028,746. Mexico Patentado No. 154,961. May depend on model. Other foreign patents issued and pending.

Emerson Process Management

Rosemount Inc.
8200 Market Boulevard
Chanhassen, MN 55317 USA
T (U.S.) 1 800 999 9307
T (International) (952) 906 8888
F (952) 949 7001

www.rosemount.com

Emerson Process Management
Heath Place
Bognor Regis
West Sussex PO22 9SH
England
T 44 (0) 1243 863121
F 44 (0) 1243 867554

Emerson Process Management Asia Pacific Private Limited
1 Pandan Crescent
Singapore 128461
T (65) 6777 8211
F (65) 6777 0947
Enquiries@AP.EmersonProcess.com

EMERSON
Process Management